MOONBI

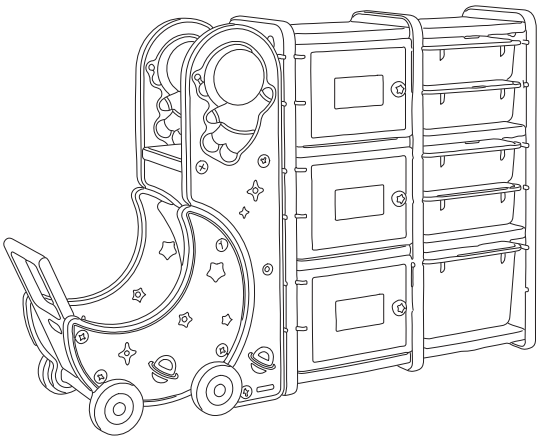

1/14

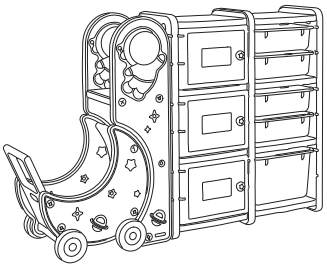

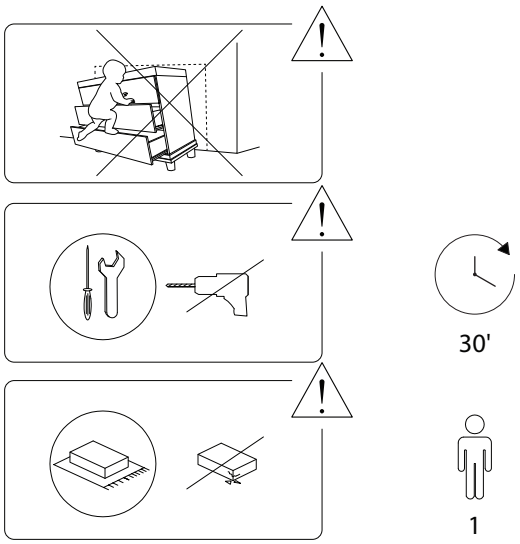

2/14

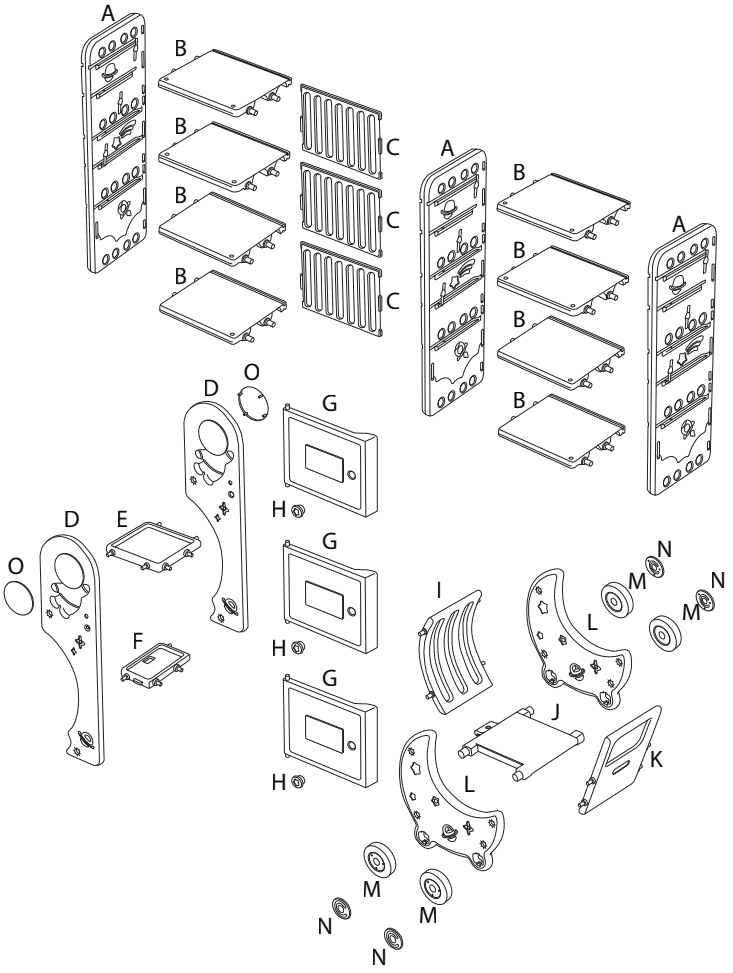

3/14

A  x 3	B 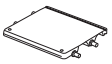 x 4	C  x 3
D  x 2	E 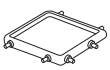 x 1	F 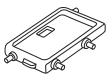 x 1
G 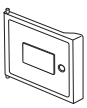 x 3	H  x 3	I 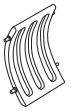 x 1
J 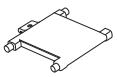 x 1	K  x 1	L  x 2
M  x 4	N  x 4	O  x 4

4/14

2902/MOONBI/221026/

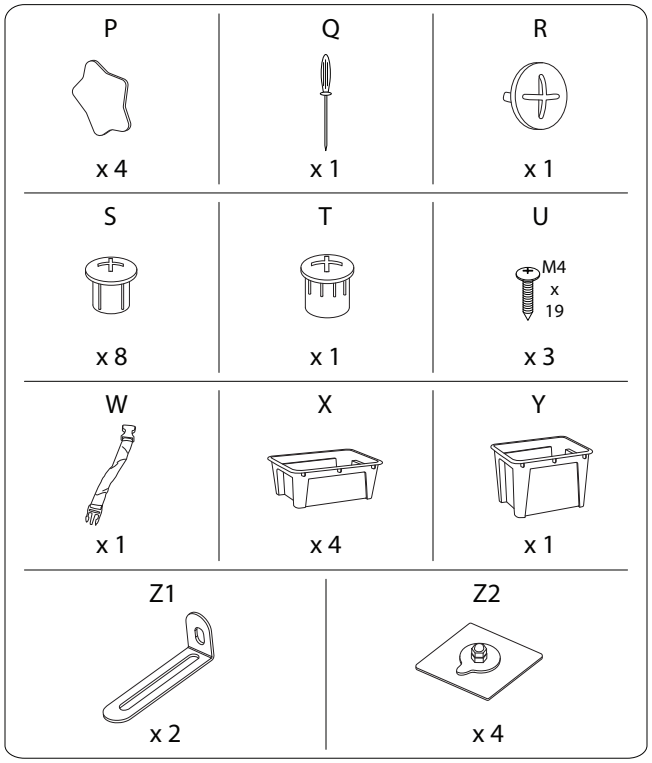

5/14

2902/MOONBI/221026/

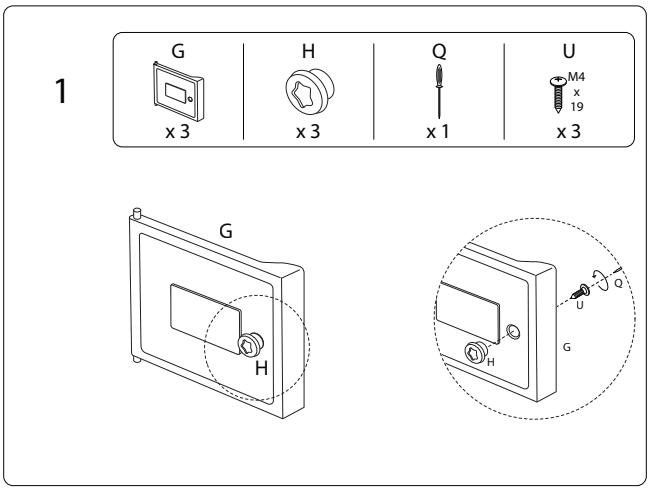

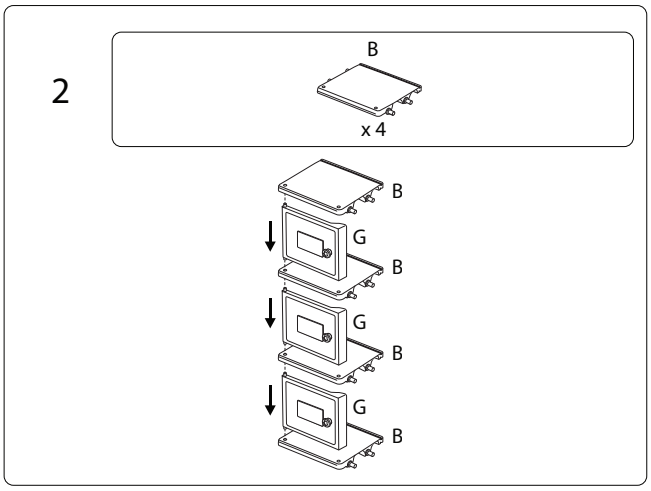

6/14

2902/MOONBI/221026/

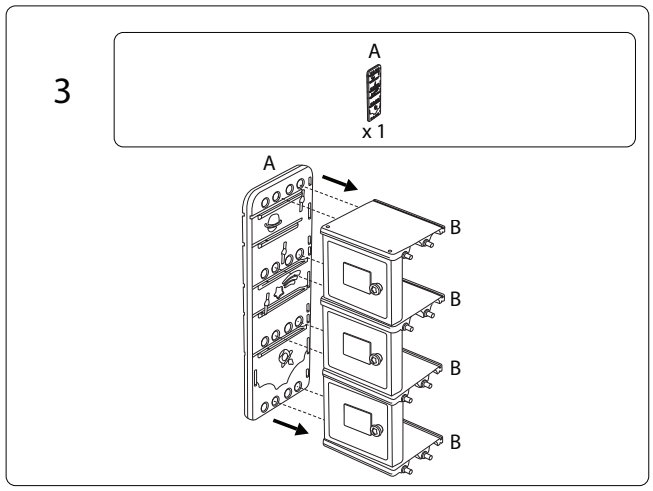

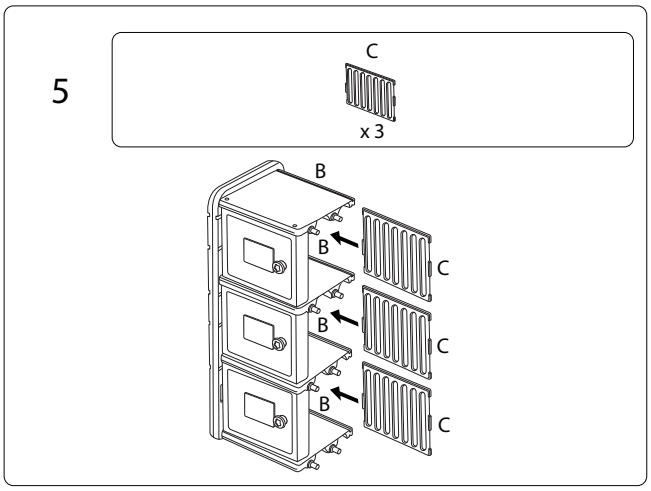

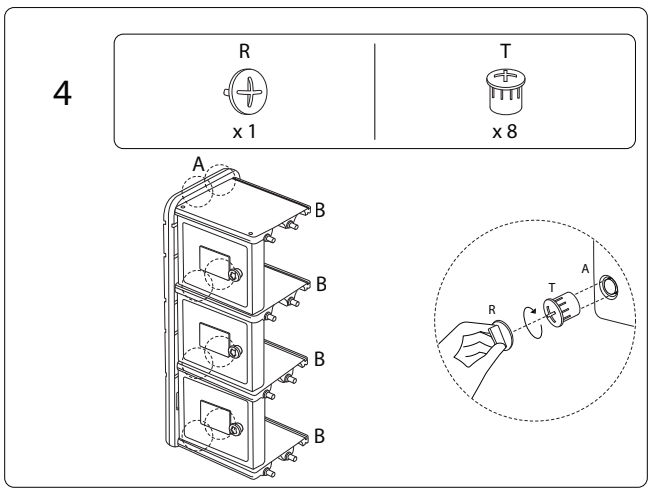

7/14

2902/MOONBI/221026/

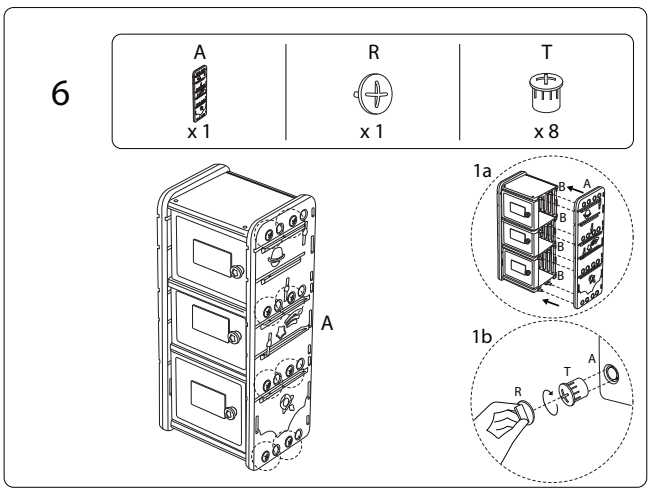

8/14

2902/MOONBI/221026/

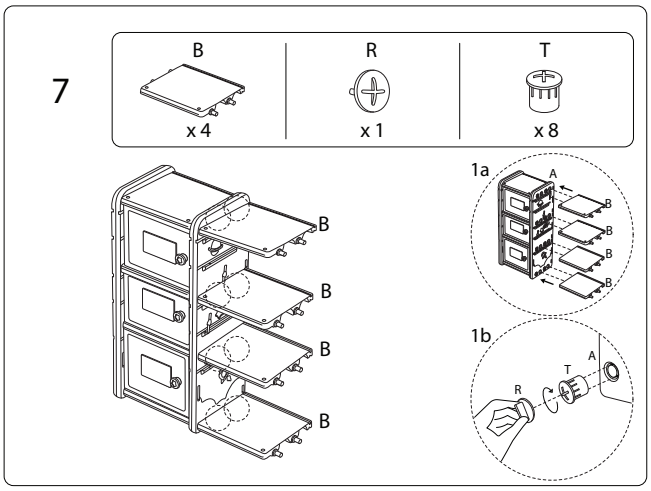
7
B
x 4
R
x 1
T
x 8
1a
1b

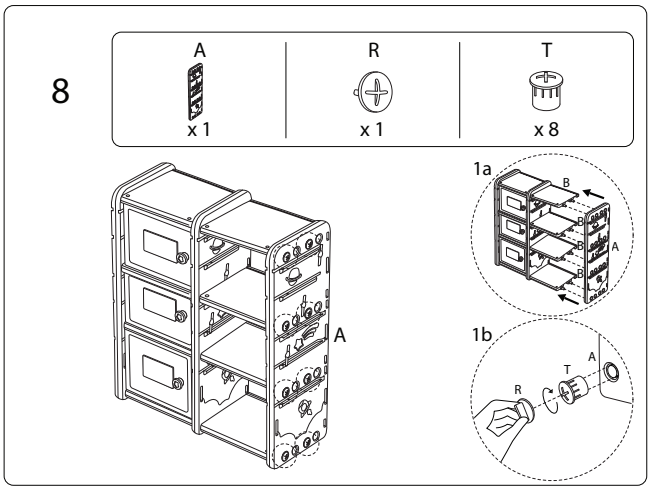
8
A
x 1
R
x 1
T
x 8
1a
1b

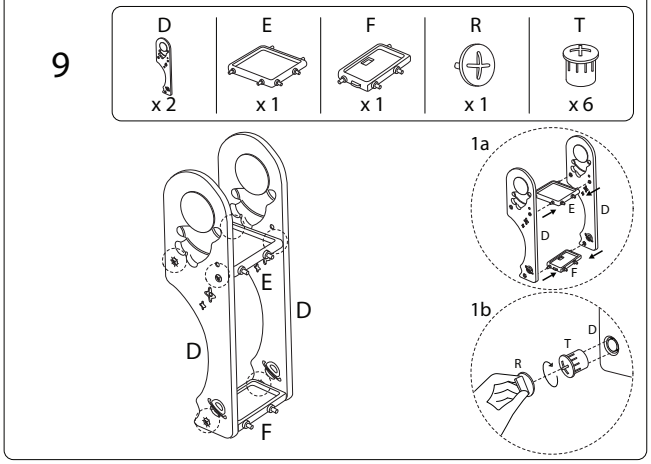
9
D
x 2
E
x 1
F
x 1
R
x 1
T
x 6
1a
1b

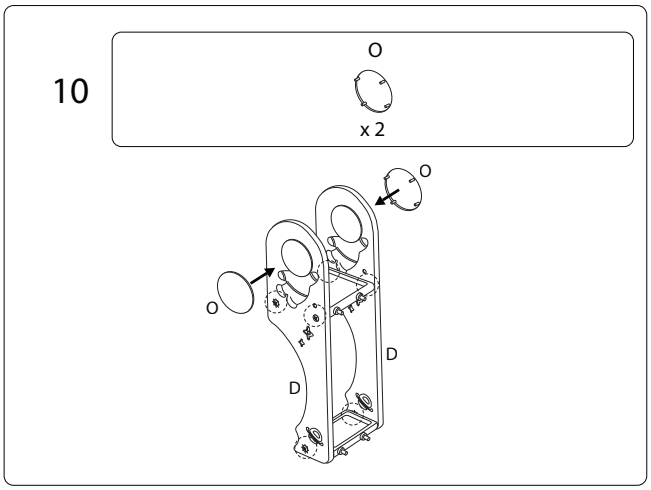
10
O
x 2

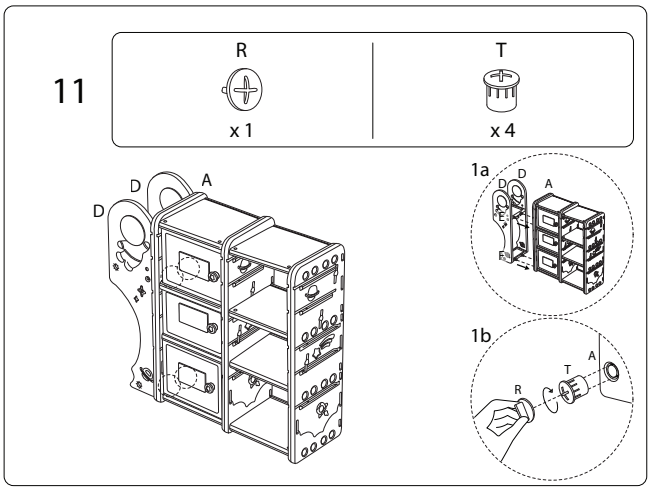
11
R
x 1
T
x 4
1a
1b

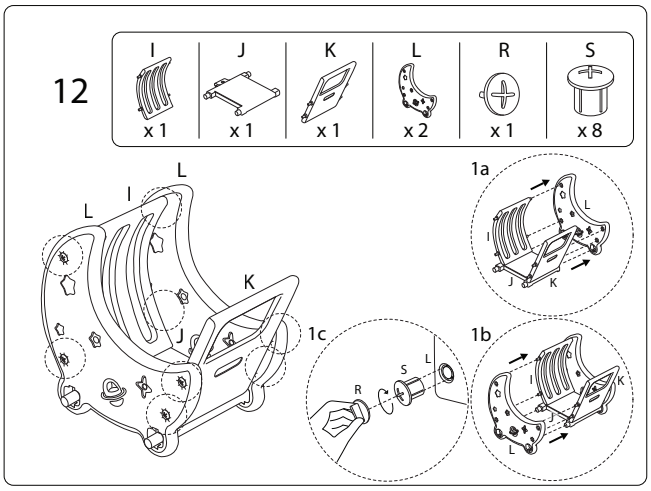
12
I
x 1
J
x 1
K
x 1
L
x 2
R
x 1
S
x 8
1a
1b
1c

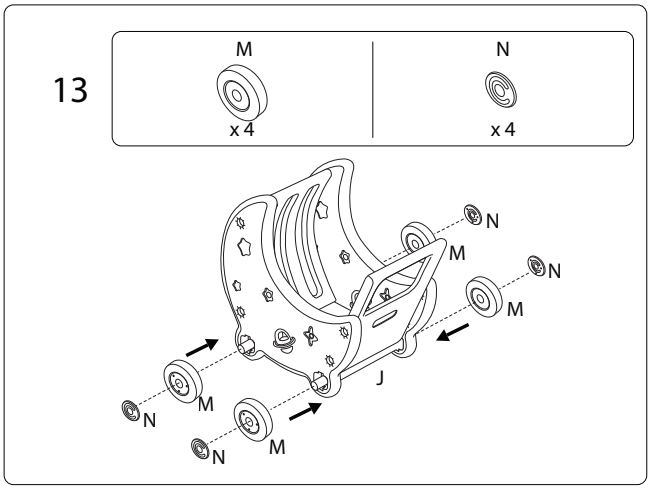
13
M
x 4
N
x 4

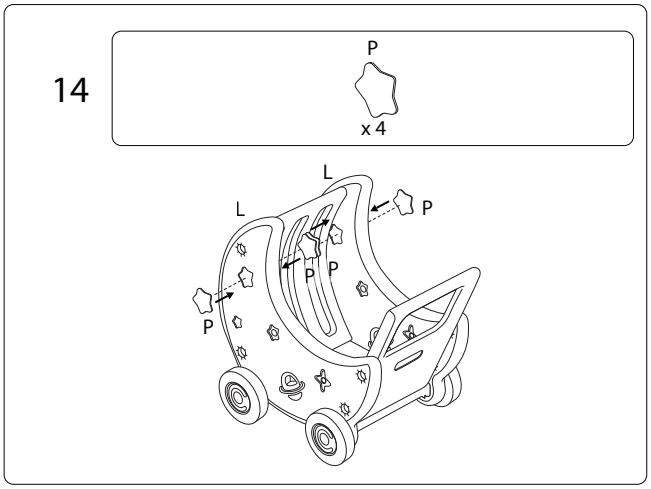
14
P
x 4

15

X x 4 | Y x 1

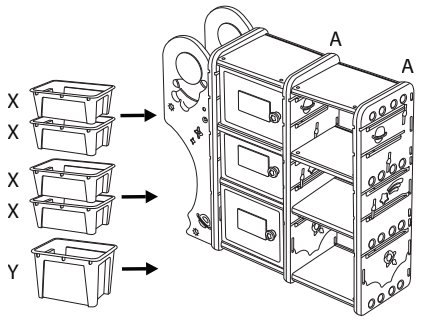

16

W x 1

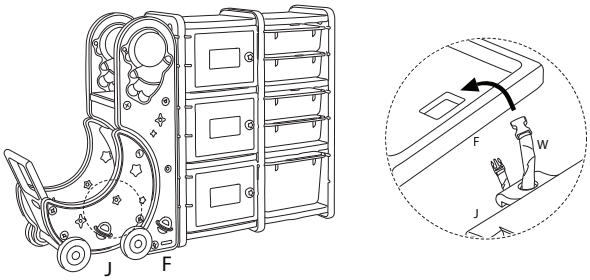

17

Z1 x 2 | Z2 x 4

