COSTELLO

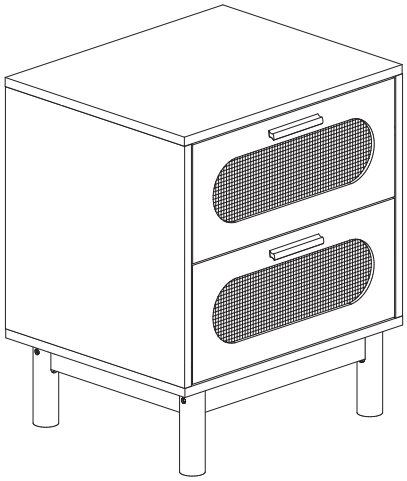

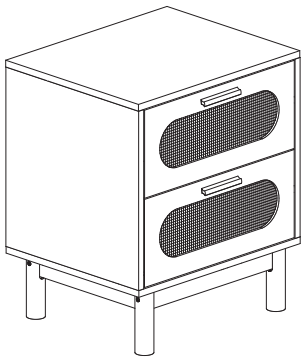

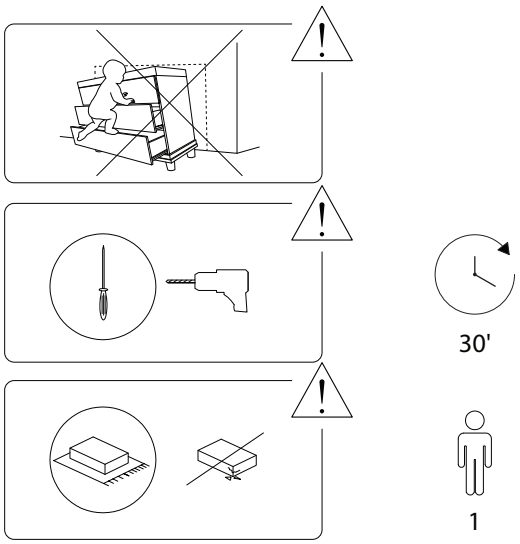
30'
1

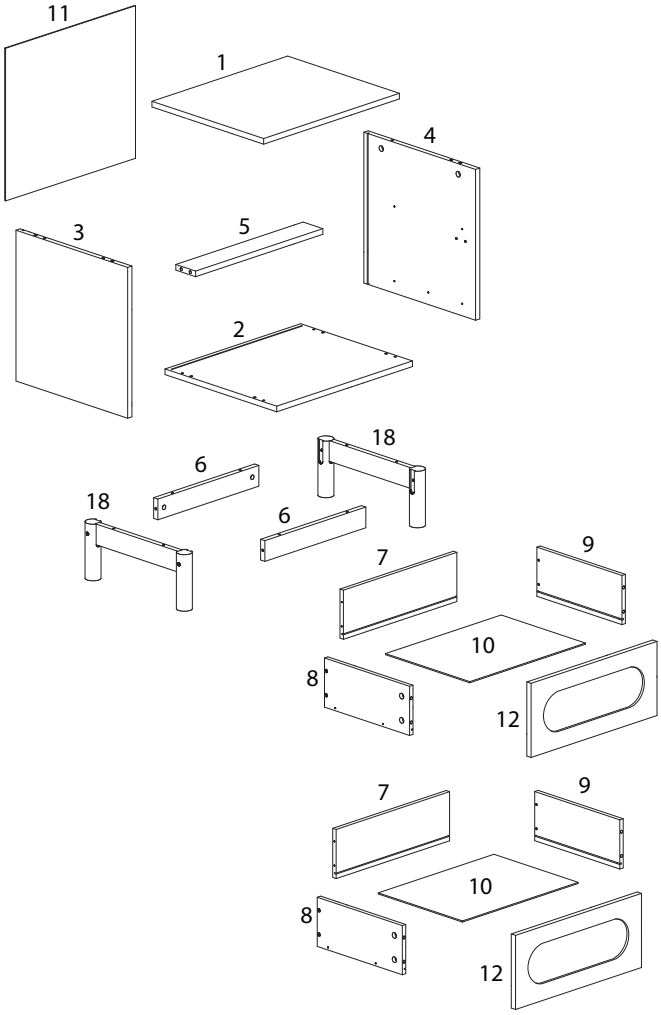
11
1
4
3
5
2
18
6
18
6
7
9
10
8
12
7
9
10
8
12

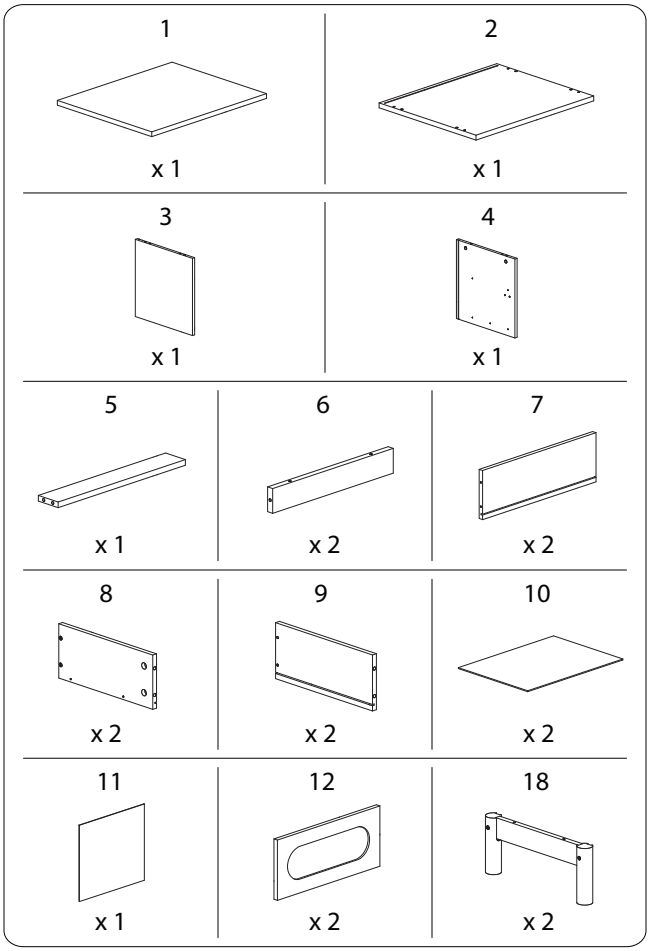
1
x 1
2
x 1
3
x 1
4
x 1
5
x 1
6
x 2
7
x 2
8
x 2
9
x 2
10
x 2
11
x 1
12
x 2
18
x 2

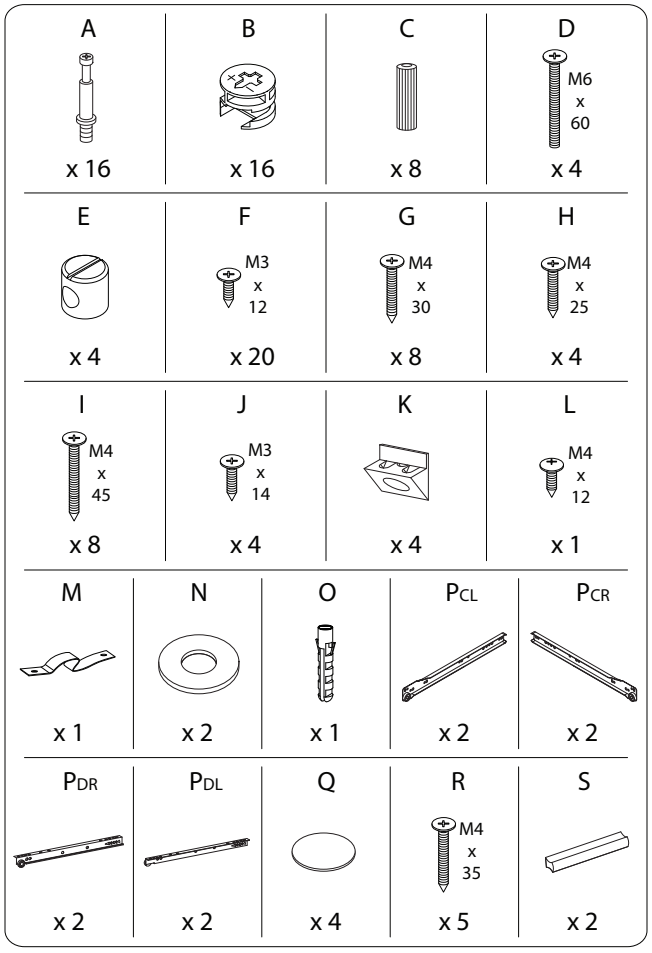
A
x 16
B
x 16
C
x 8
D
M6 x 60
x 4
E
x 4
F
M3 x 12
x 20
G
M4 x 30
x 8
H
M4 x 25
x 4
I
M4 x 45
x 8
J
M3 x 14
x 4
K
x 4
L
M4 x 12
x 1
M
x 1
N
x 2
O
x 1
PCL
x 2
PCR
x 2
PDR
x 2
PDL
x 2
Q
x 4
R
M4 x 35
x 5
S
x 2

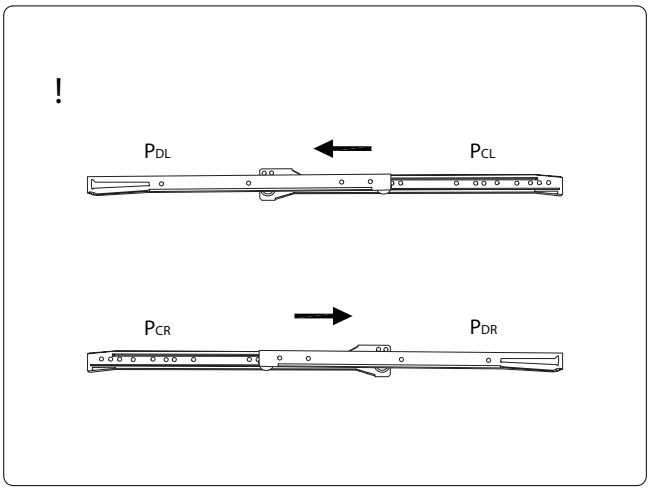
!
PDL
PCL
PCR
PDR

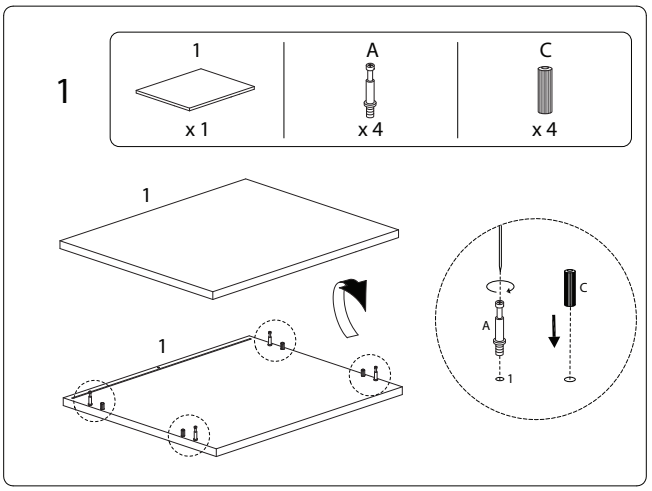
1
1
x 1
A
x 4
C
x 4
1
1
A
C
1

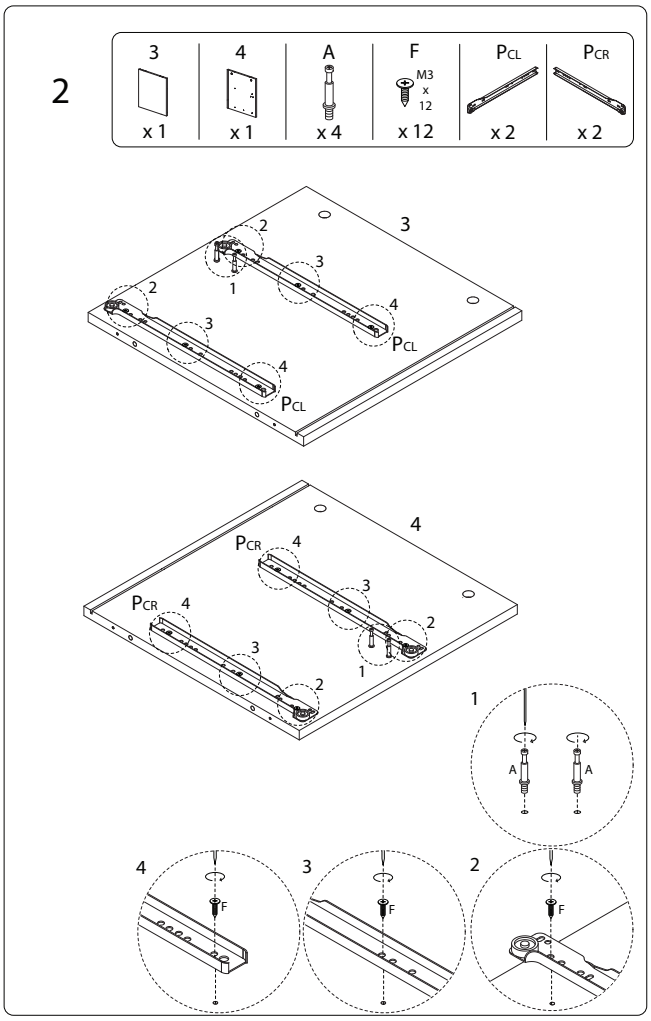
2
3
x 1
4
x 1
A
x 4
F
M3 x 12
x 12
PCL
x 2
PCR
x 2
PCL
PCL
PCR
PCR
1
A
A
4
F
3
F
2
F

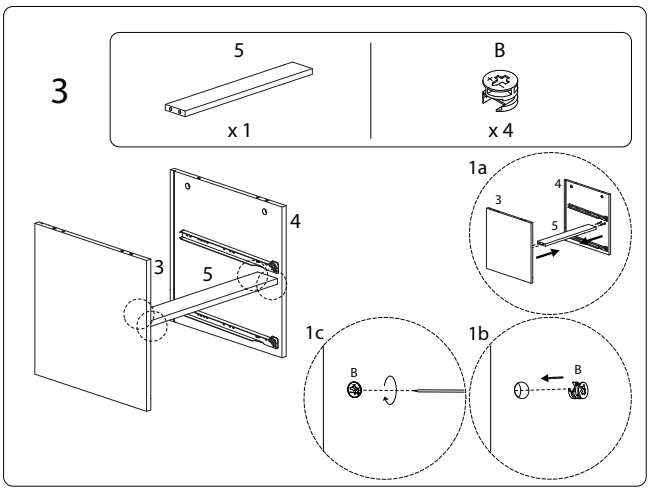
3
5
x 1
B
x 4
1a
1c
1b
B
B

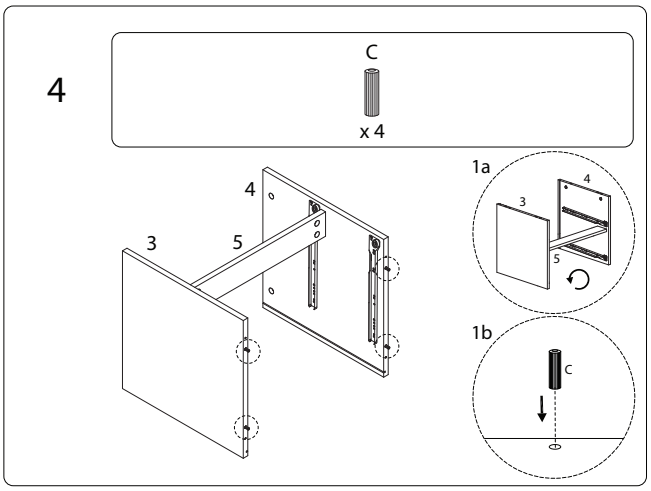
4
C
x 4
1a
1b
C

5

2	R
	M4 x 35
x 1	x 4

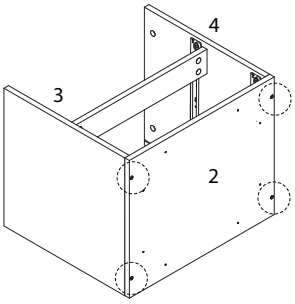

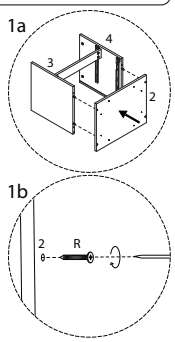

6

6	18	D	E
		M6 x 60	
x 2	x 2	x 4	x 4

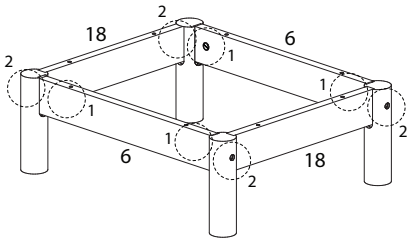

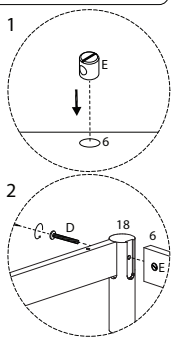

7

I	Q
M4 x 45	
x 8	x 4

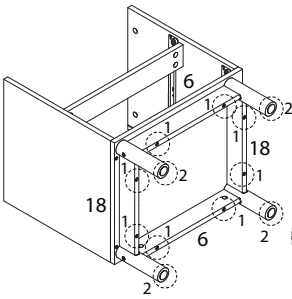

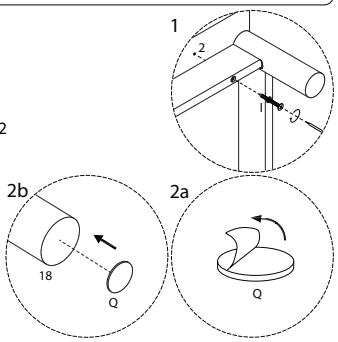

8

11
x 1

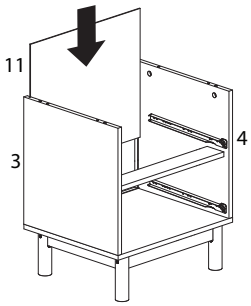

9

B
x 4

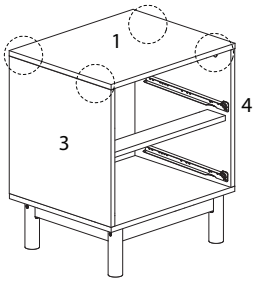

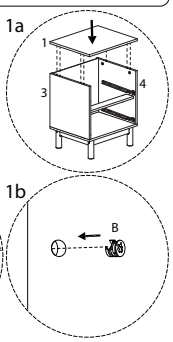

11 x 2

10
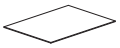
x 1

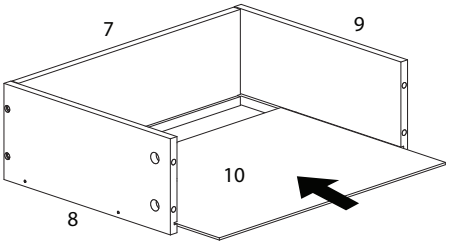

10 x 2

7	8	9	G
			M4 x 30
x 1	x 1	x 1	x 4

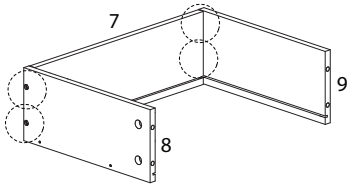

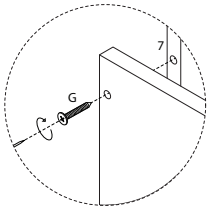

12 x 2

12	A	H	S
		M4 x 25	
x 1	x 4	x 2	x 1

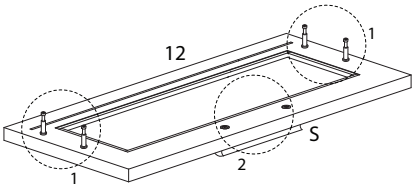

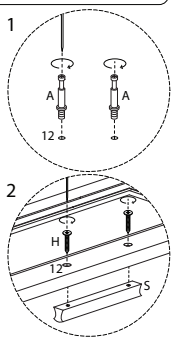

13 x 2

B
x 4

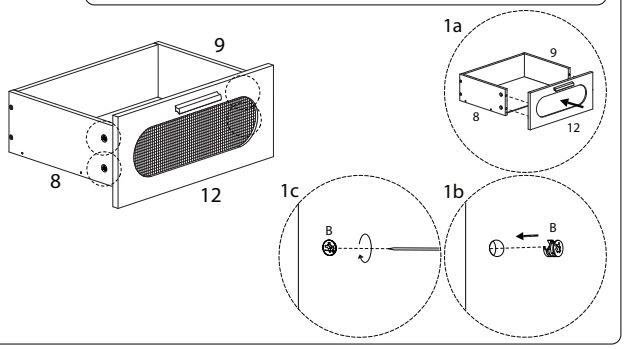

15

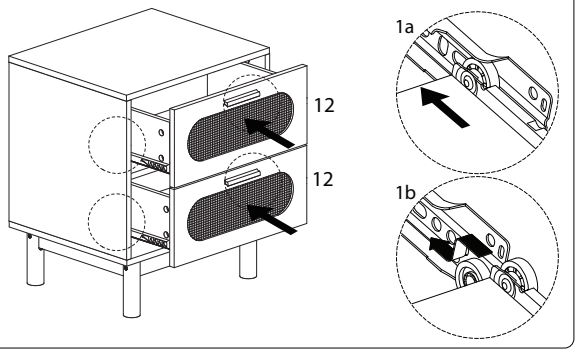

14 x 2

P_{DR}	P_{DL}	F
x 1	x 1	M3 x 12 x 4

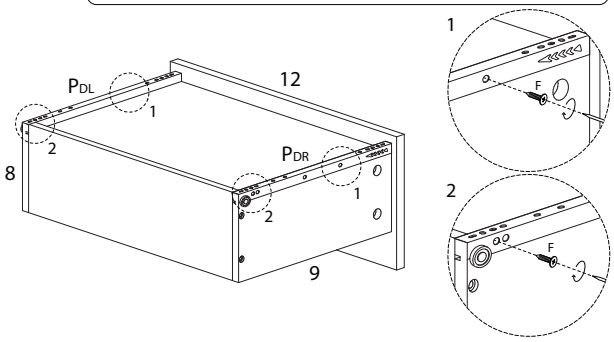

16

J	K
M3 x 14 x 4	x 4

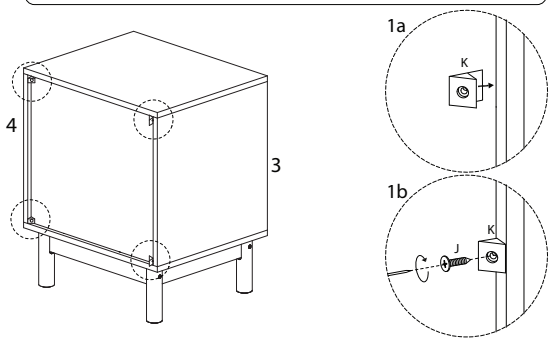

17

L	M	N
M4 x 12 x 1	x 1	x 1

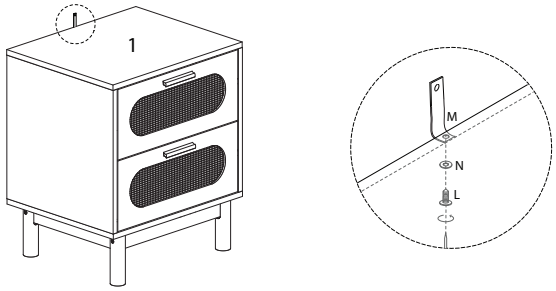

18
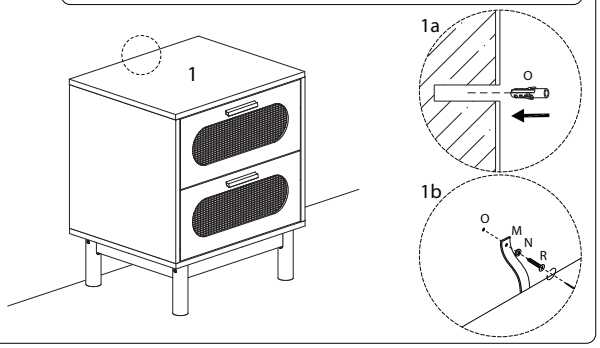
N	O	R
x 1	x 1	M4 x 35 x 1