LIMERIA

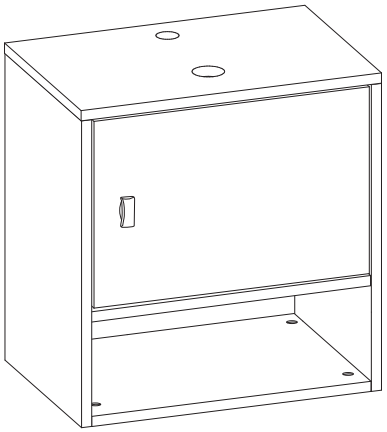

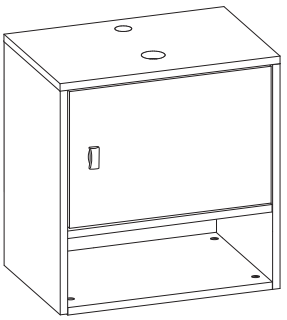

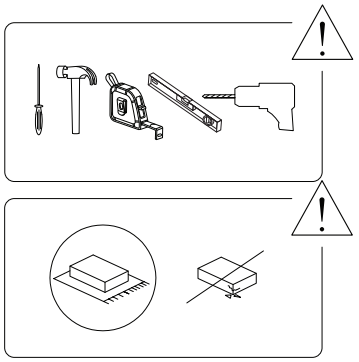

1/11

1	2	3
x 1	x 1	x 1

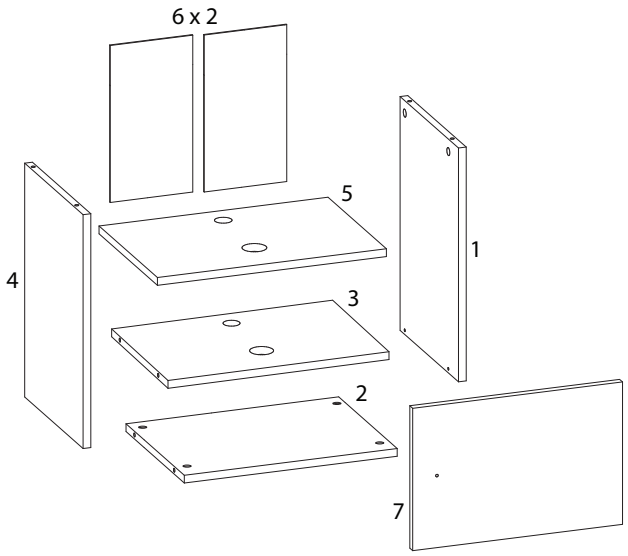

4	5	6	7
x 1	x 1	x 2	x 1

2/11

A	B	C
M3.5 x 14		M5 x 50
x 14	x 4	x 2
D	**E**	**F**
x 20	x 8	x 8
G_1	**G_2**	**H**
x 2	x 2	x 2
I	**J**	**K**
x 2	x 1	M3.5 x 25 x 1

L
x 1

3/11

!

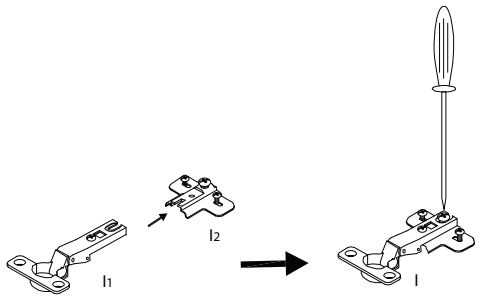

1

7	A	I
x 1	x 4	x 2

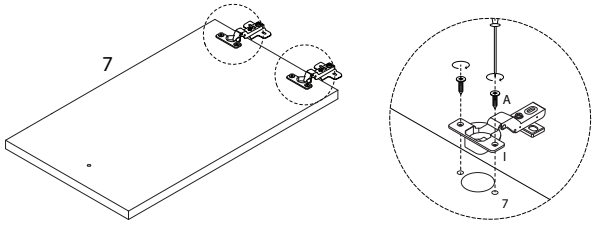

2

1	4	5	A	E	G1	L
x 1	x 1	x 1	M3.5 x 14 x 6	x 8	x 2	x 1

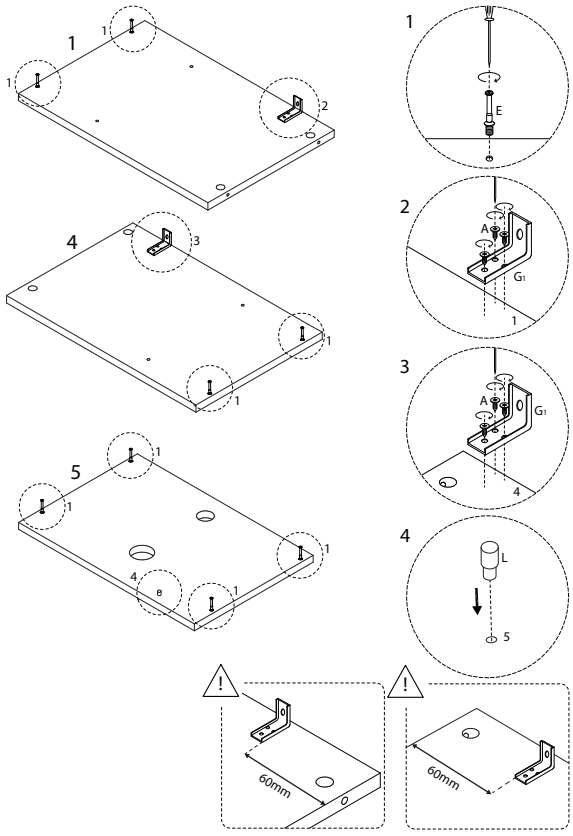

3

3	B
x 1	x 4

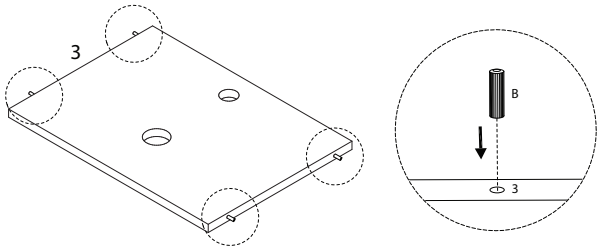

5

F
x 2

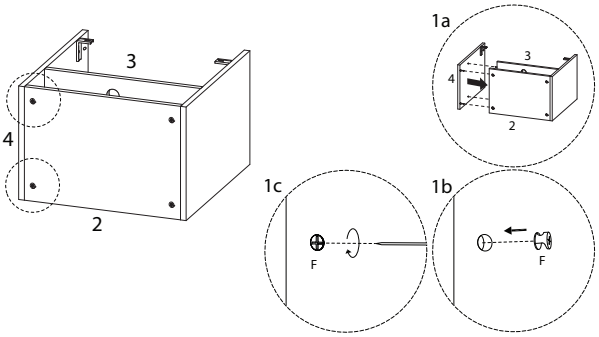

4

2	F
x 1	x 2

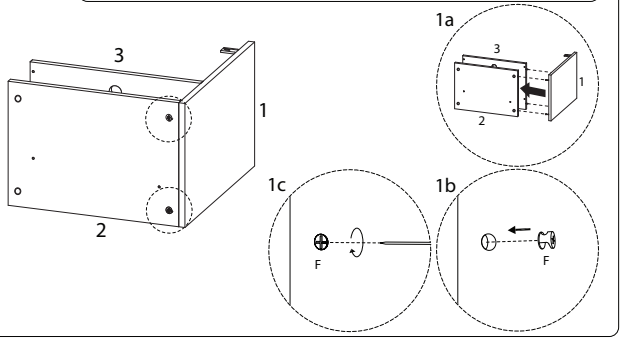

6

F
x 4

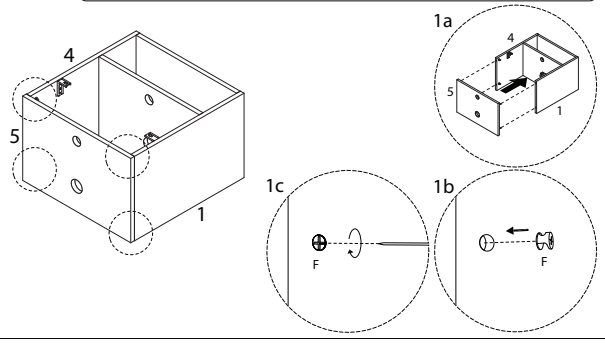

7

A
M3.5 x 14
x 4

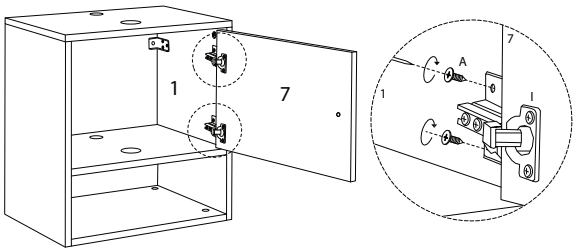

8

J
x 1

K
M3.5 x 25
x 1

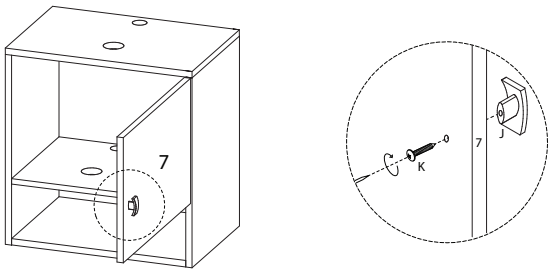

2364/LIMERIA/200525/

!

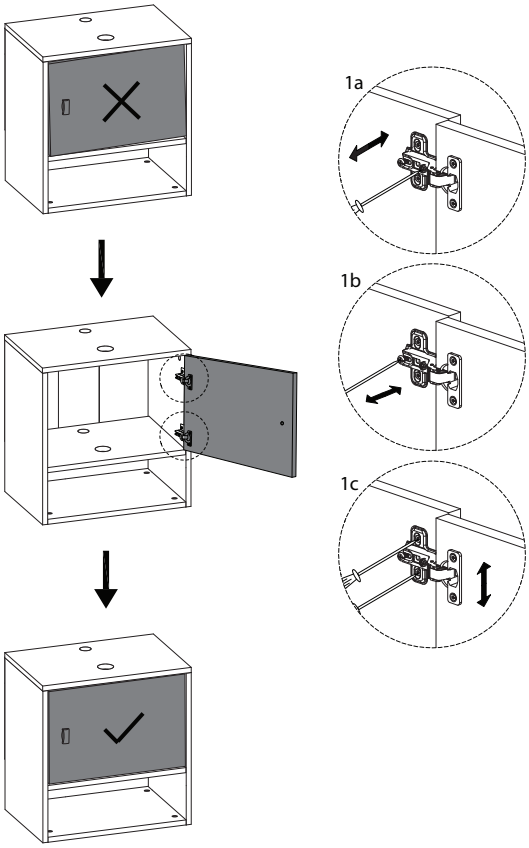

2364/LIMERIA/200525/

9

6
x 2

D
x 20

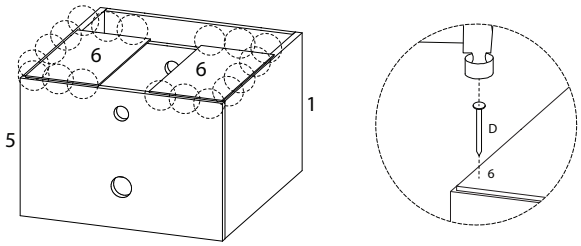

10

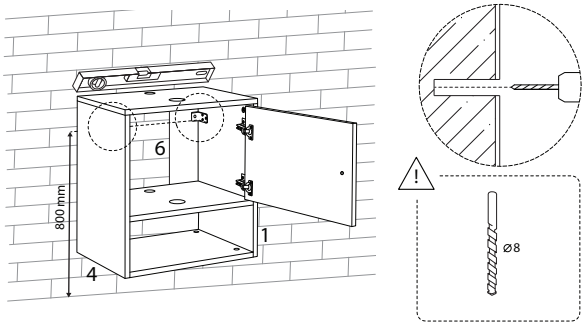

2364/LIMERIA/200525/

11

G2
x 2

H
x 2

C
M5 x 50
x 2

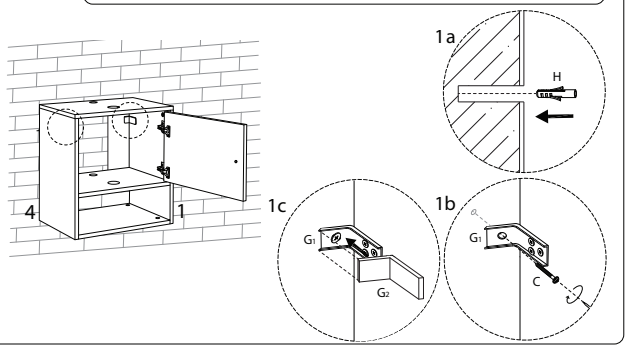

2364/LIMERIA/200525/