COROICO

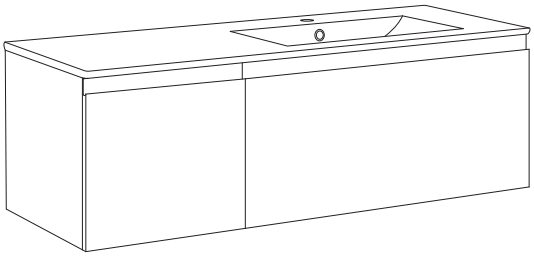

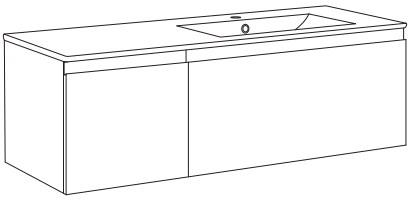

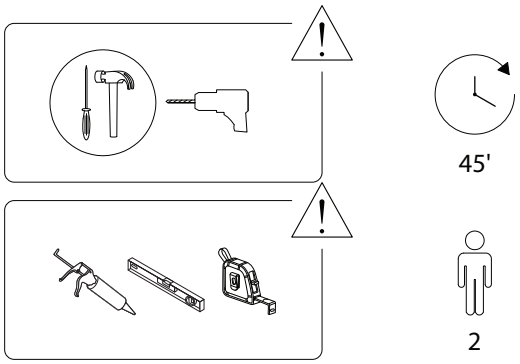

2353/COROICO/080925/

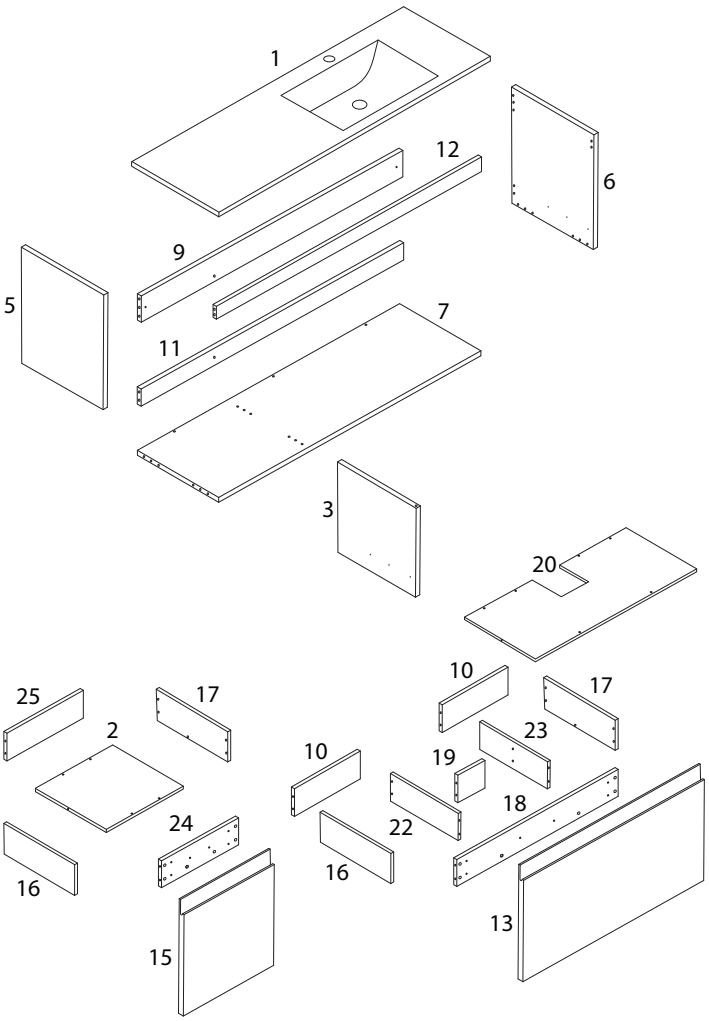

2353/COROICO/080925/

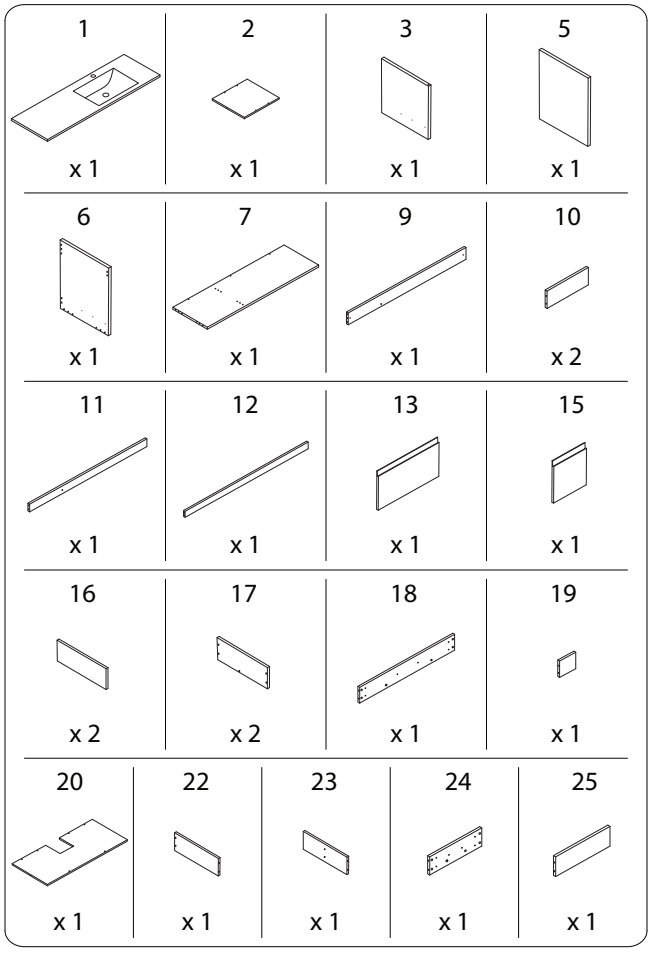

2353/COROICO/080925/

N1	N2	N4
x 66	x 66	x 14
N7L	N7R	N10
x 2	x 2	M4 x 14 x 32
N11	N12	N13A
M4 x 25 x 8	M6 x 25 x 4	x 2
N13B	N13C	
M6 x 70 x 2	x 2	

1

3	5	6	7	9	11	N1
x 1	x 1	x 1	x 1	x 1	x 1	x 24

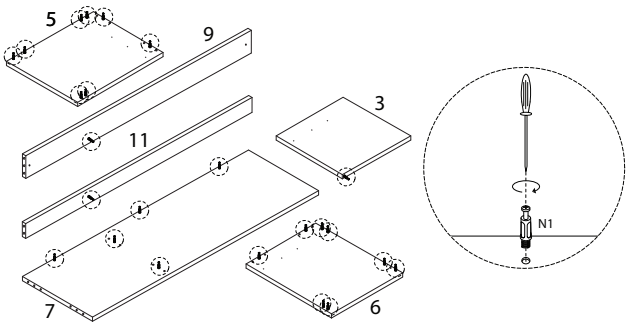

2

N4
x 14

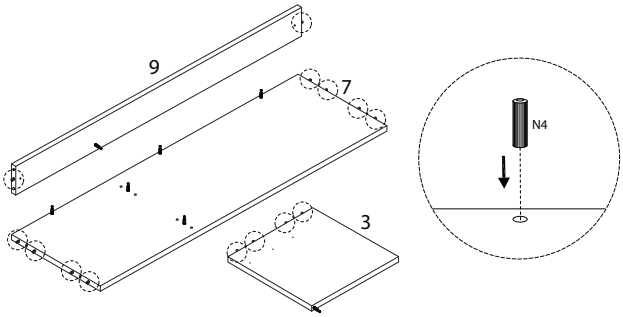

3

12	N2
x 1	x 3

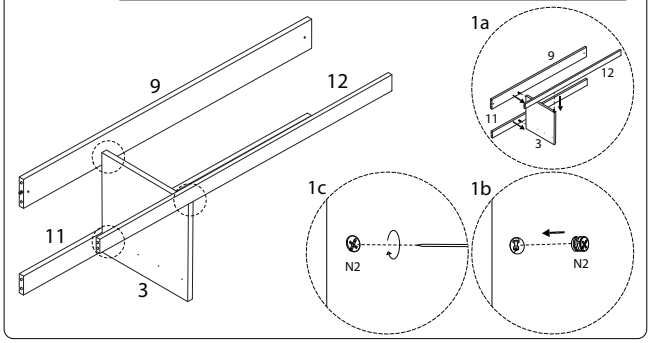

4

N2
x 5

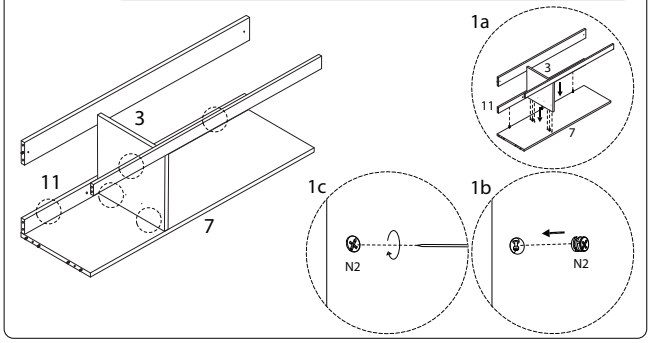

5

N2
x 8

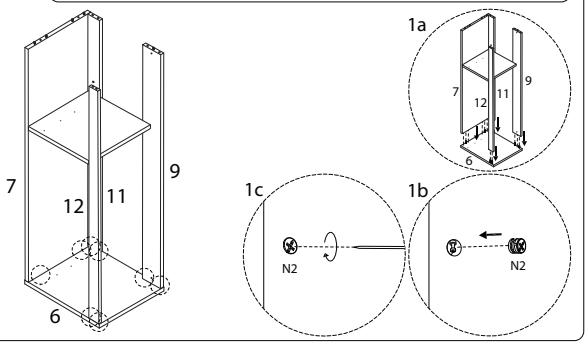

6

N2
x 8

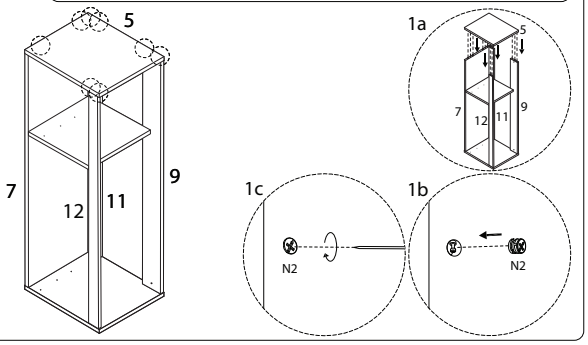

7

N7R	N10
x 2	x 6

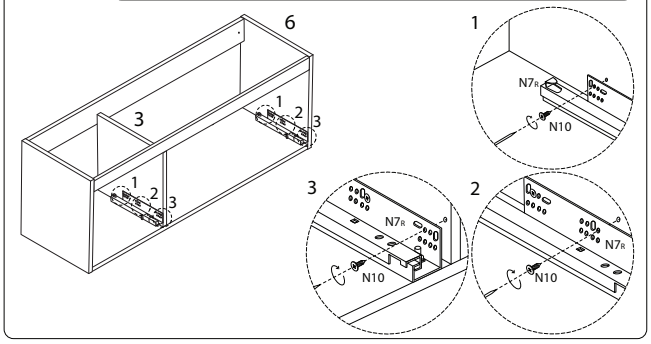

8

N7L	N10
x 2	x 6

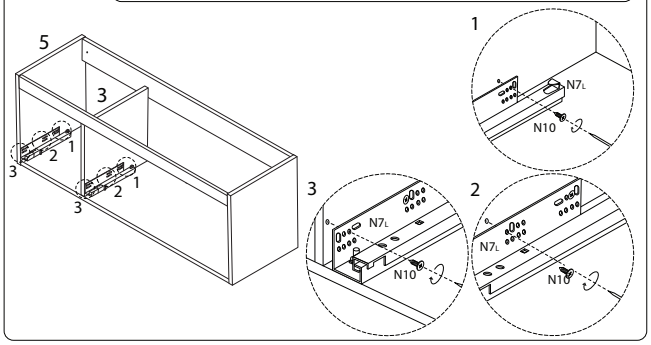

9

2	16	17	18	20	22	23	N1
x 1	x 2	x 2	x 1	x 1	x 1	x 1	x 42

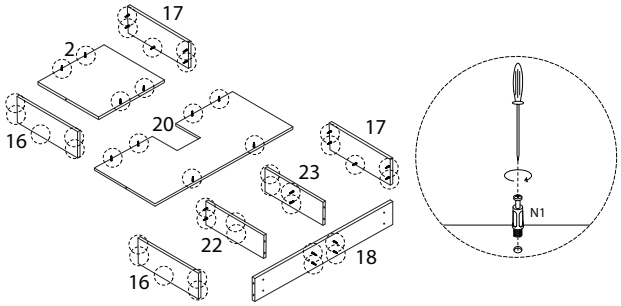

10

19	N2
x 1	x 4

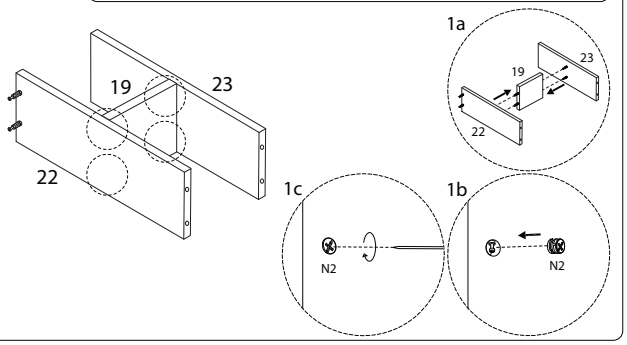

11

10	N2
x 2	x 8

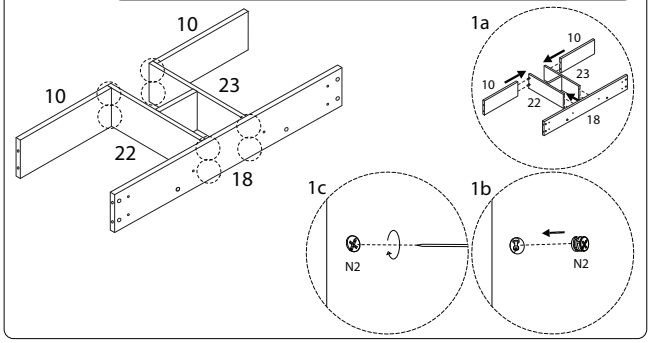

12

N2
x 6

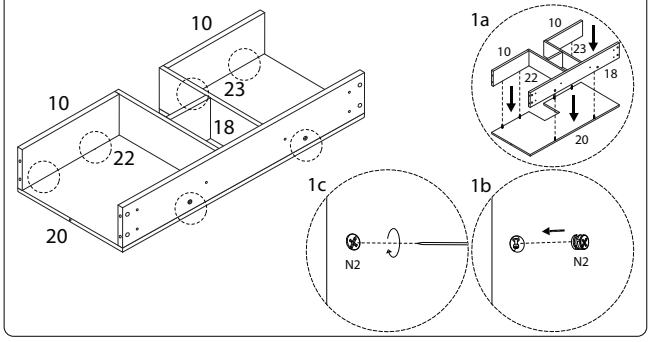

13

N2
x 10

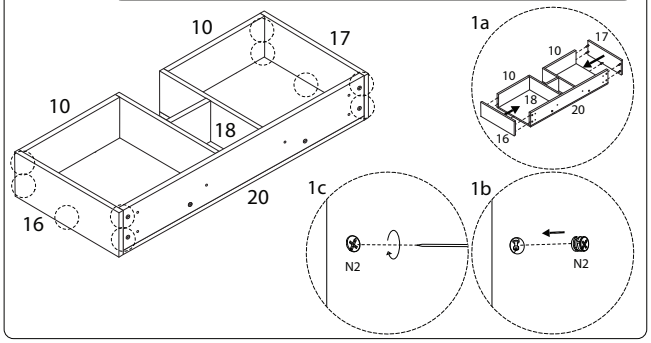

14

24	25	N2
x 1	x 1	x 4

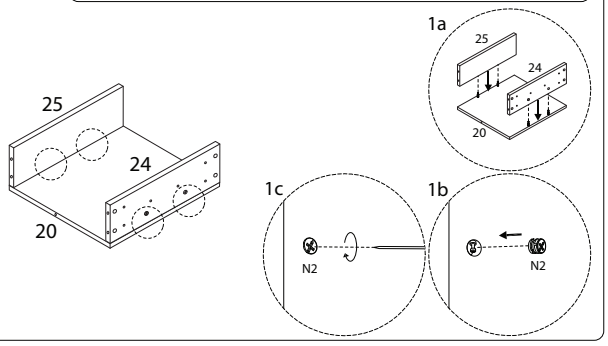

15

N2
x 8

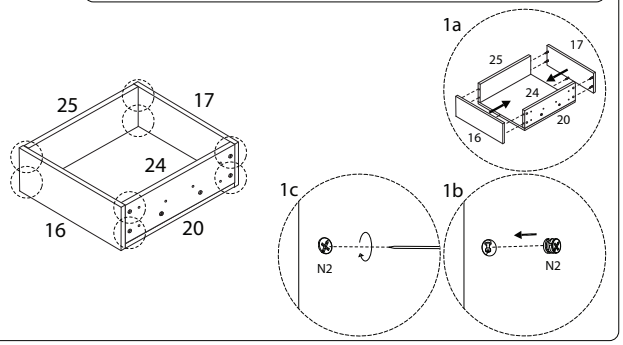

16

13	15	N12
x 1	x 1	x 4

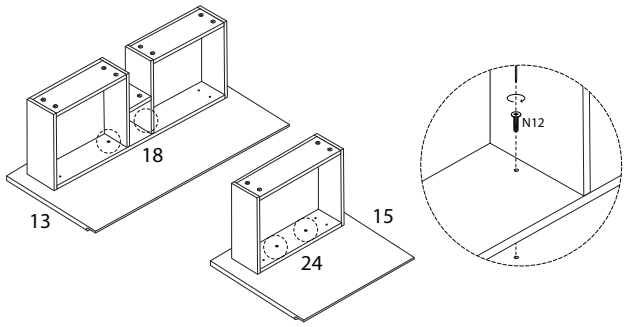

17

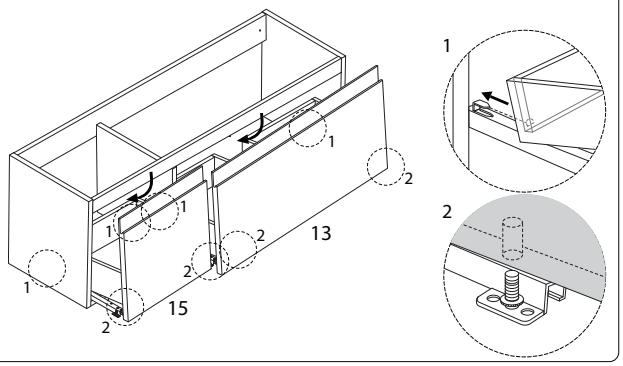

18

N10
M4 x 14
x 4

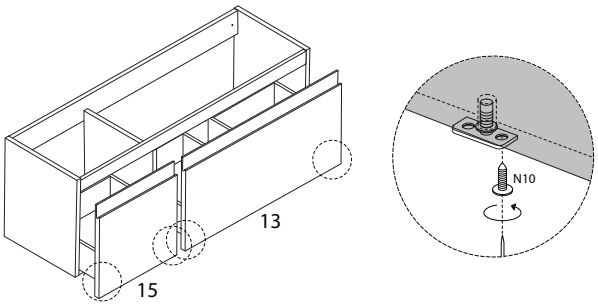

19

N11
M4 x 25
x 8

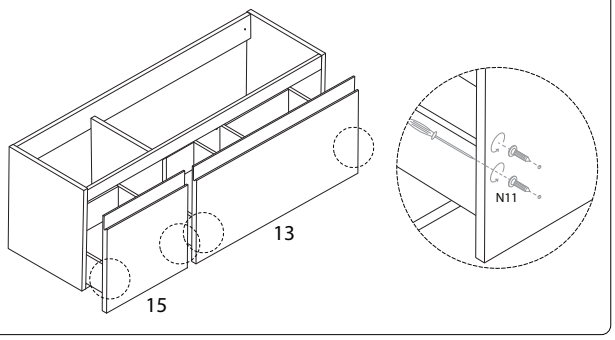

20

N10	N13A
M4 x 14	
x 16	x 2

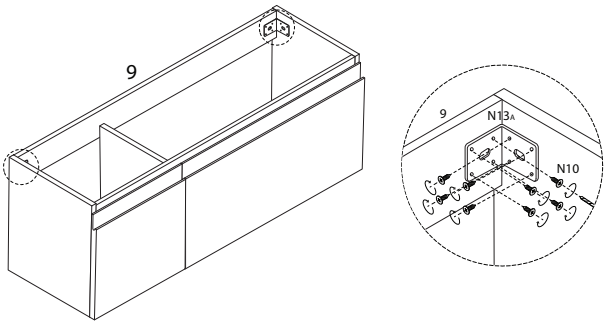

21

N13B	N13C
M6 x 70	
x 2	x 2

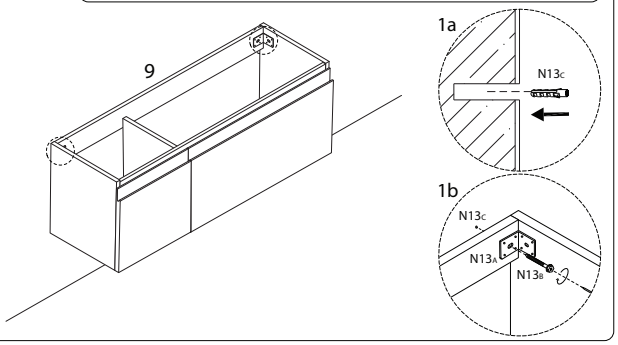

22

1
x 1

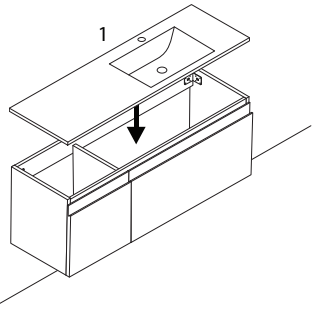

23

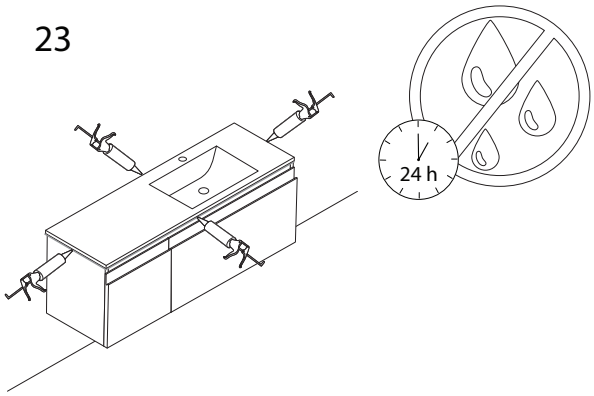

!

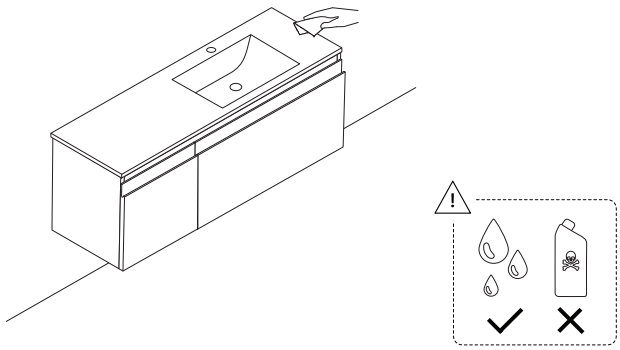

2353/COROICO/080925/