BRISTOW

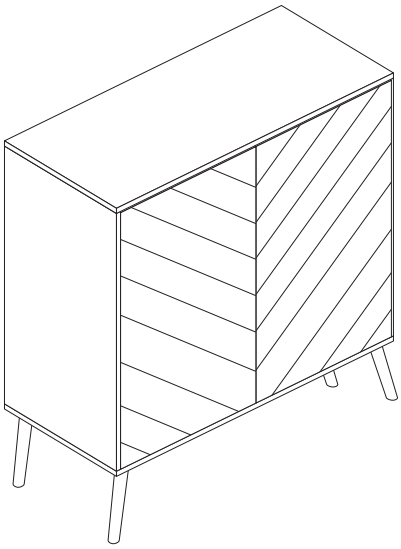

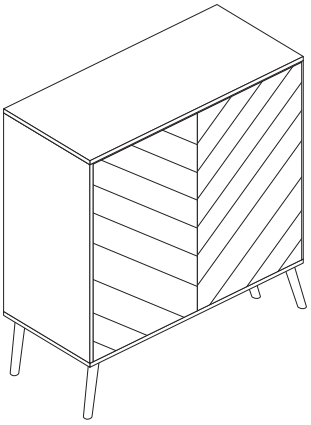

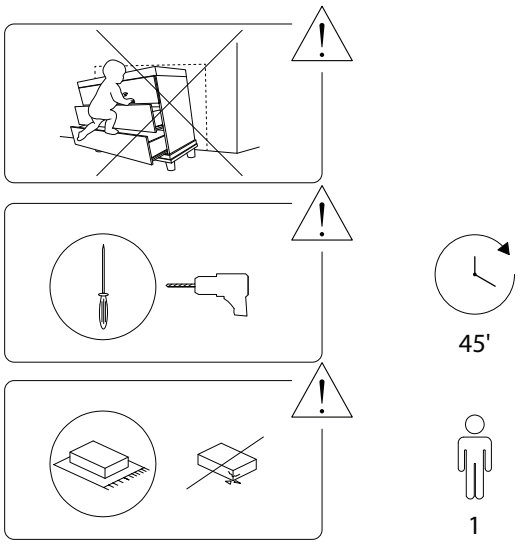

1/16

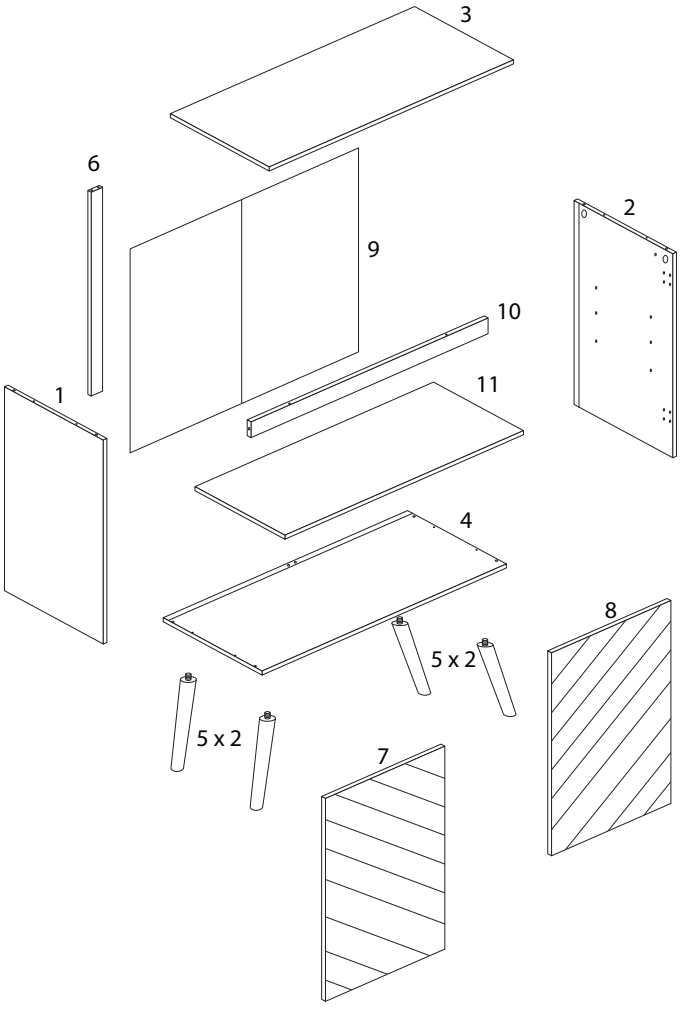

2/16

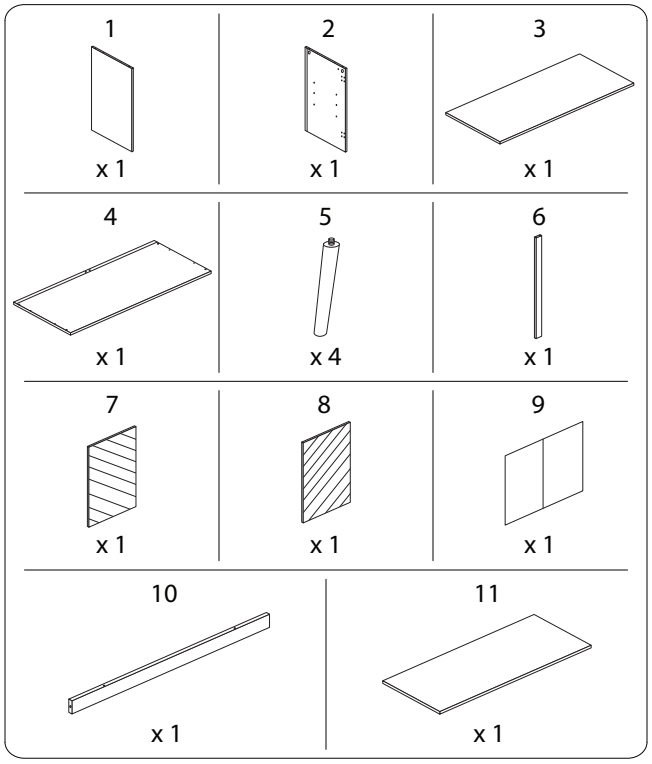

3/16

A	B	C
		
x 8	x 8	x 8
D	**E**	**F**
 M4 x 35	 M4 x 14	 M3 x 12
x 10	x 24	x 4
G	**H**	**I**
 M4 x 14		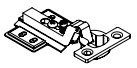
x 20	x 4	x 4
J	**K**	**L**
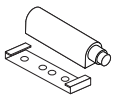	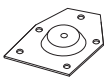	
x 2	x 4	x 4
M	**N**	**O**	**P**
		 M4 x 12	
x 2	x 2	x 2	x 4

1

3	A
	
x 1	x 6

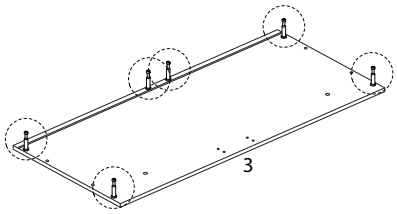

2

F	J
 M3 x 12	
x 4	x 2

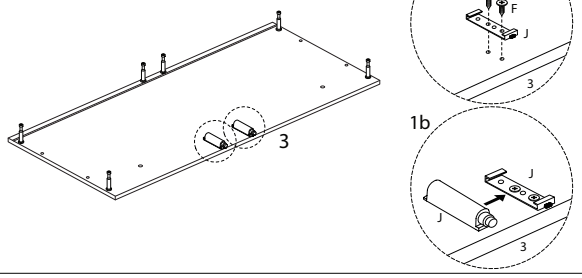

3

1	2	A
x 1	x 1	x 2

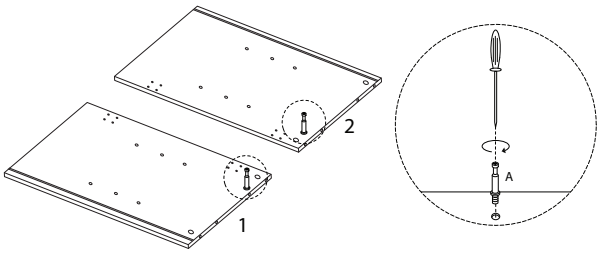

5

10
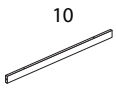
x 1

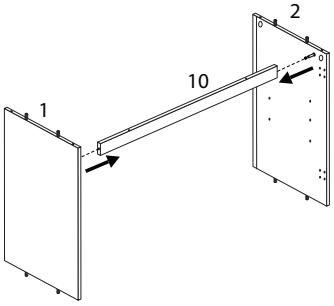

4

C

x 4

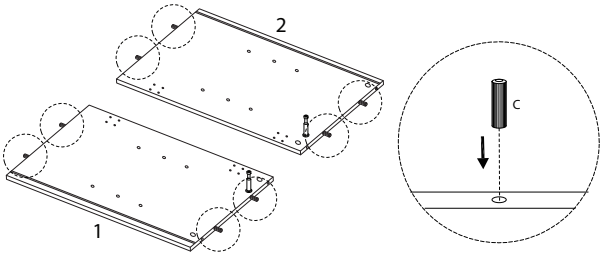

6

B

x 2

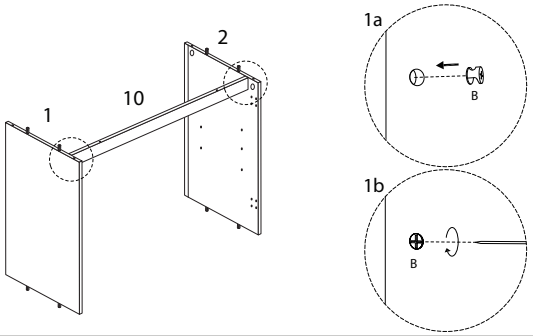

7

4 x 1

D M4 x 35 x 4

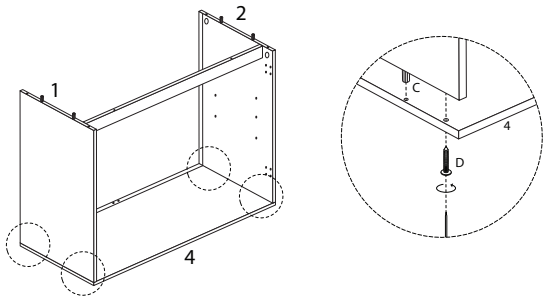

8

6 x 1

D M4 x 35 x 2

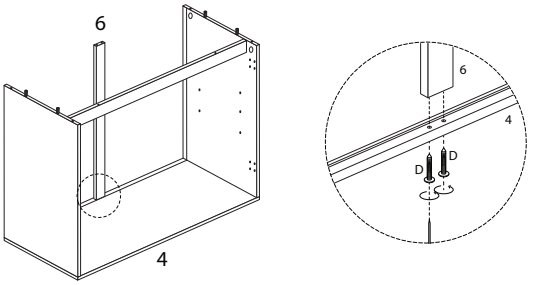

9

9 x 1

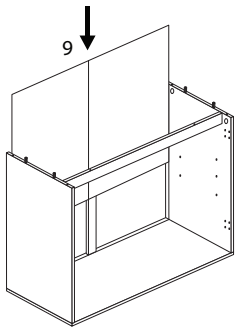

10

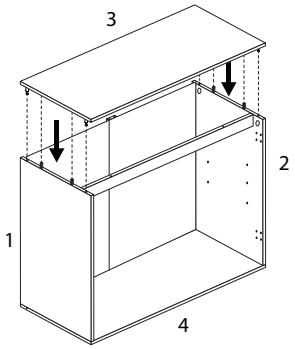

11

B x 6

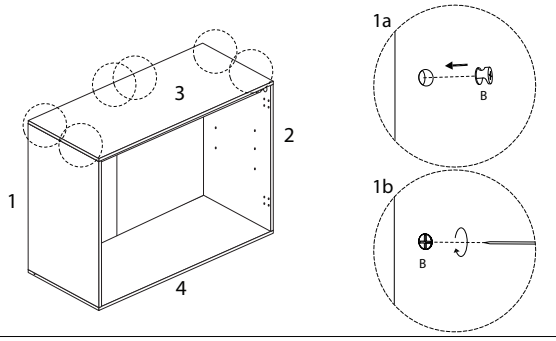

12

D M4 x 35 x 2

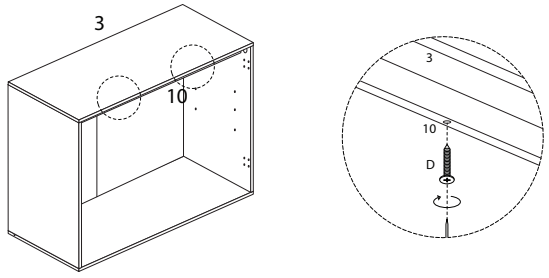

13

G M4 x 14 x 20

K x 4

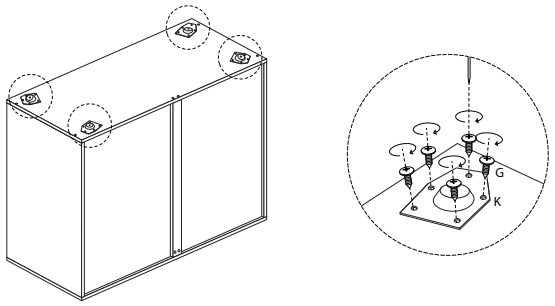

14

5 x 4

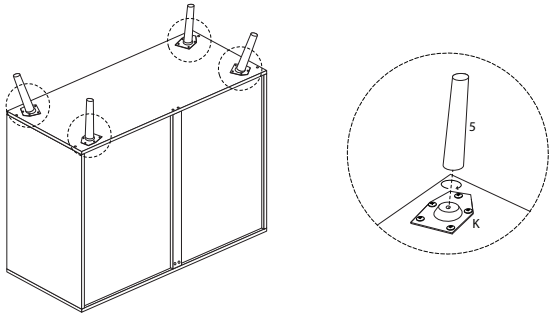

15

L

x 4

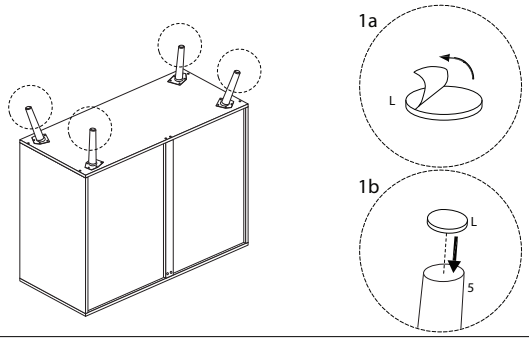

16

M

x 2

O

M4 x 12

x 2

P

x 2

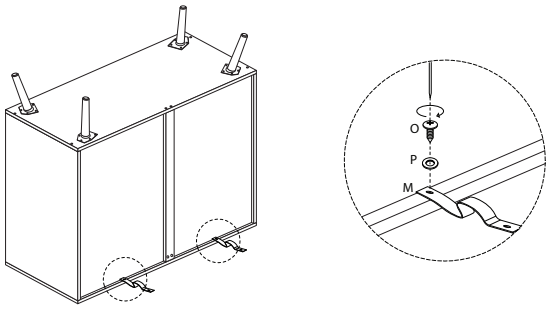

17

7

x 1

8

x 1

E

M4 x 14

x 8

I

x 4

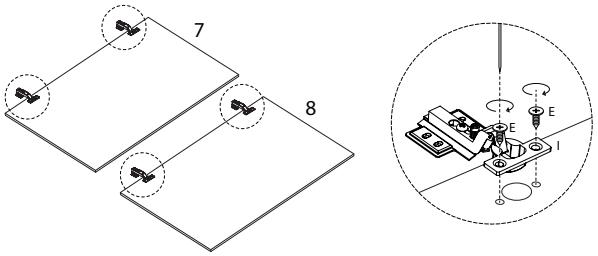

18

H

x 4

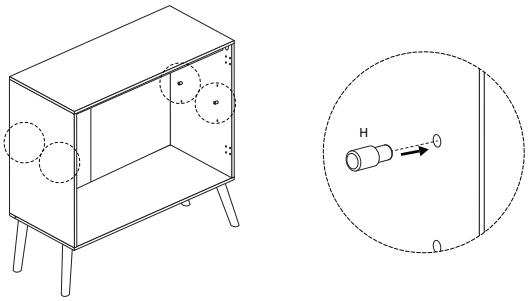

19

11

x 1

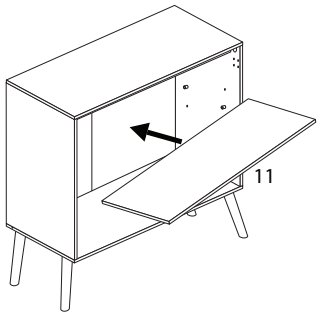

!

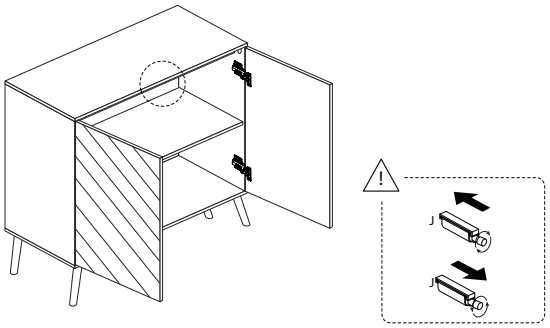

20

E

M4 x 14

x 16

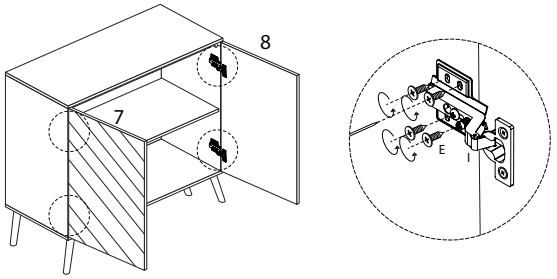

21

D

M4 x 35

x 2

N

x 2

P

x 2

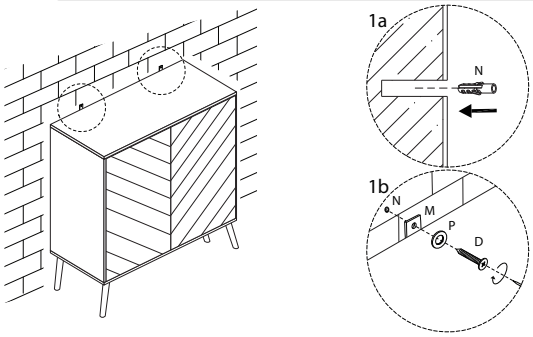

!

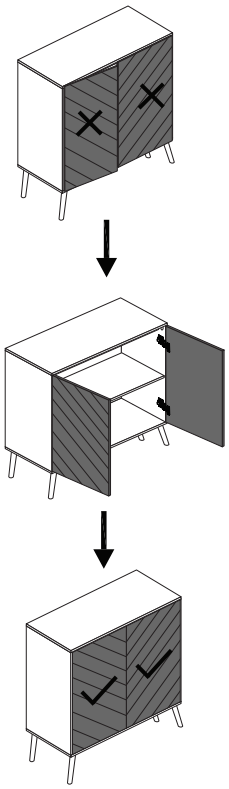

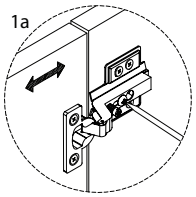

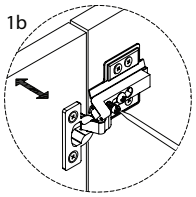

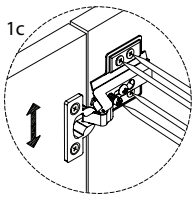

1251/BRISTOW/260225/