MARIBO

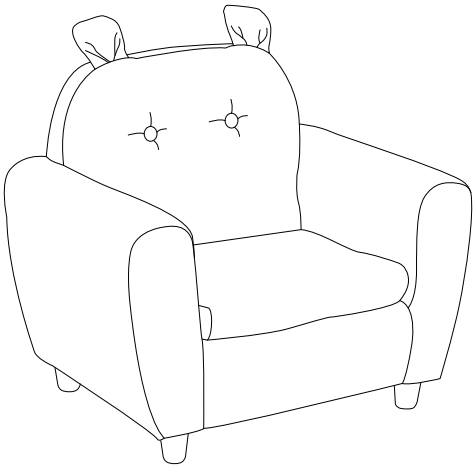

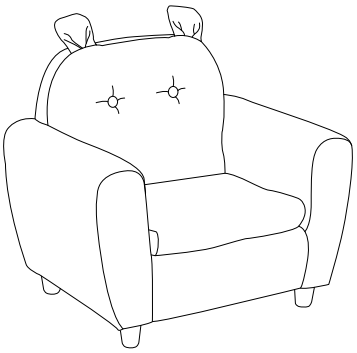

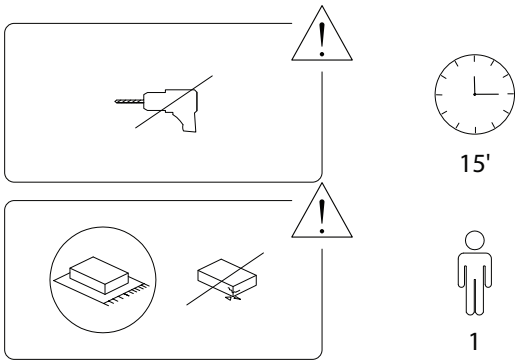

1/3

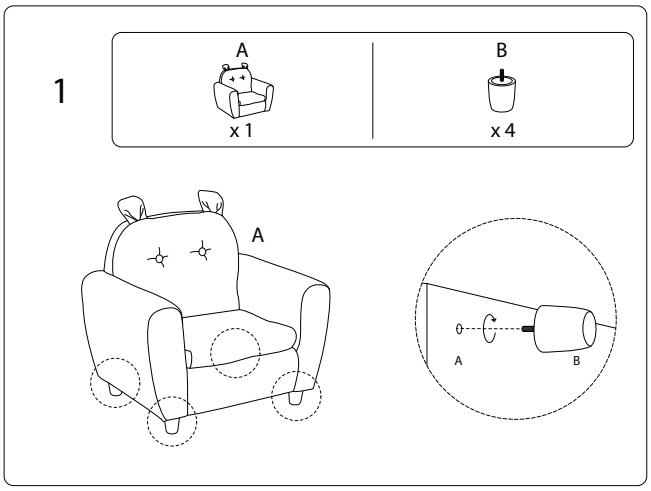

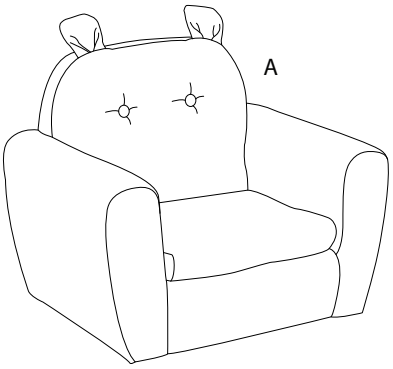

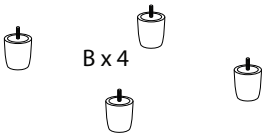

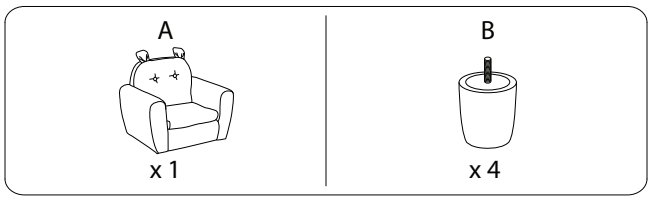

2/3

3/3