CHADENET

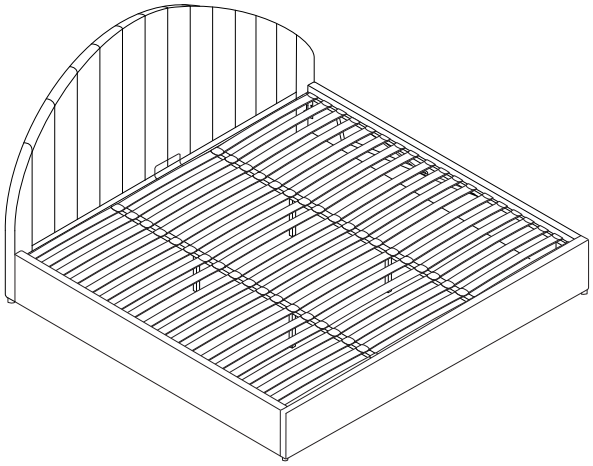

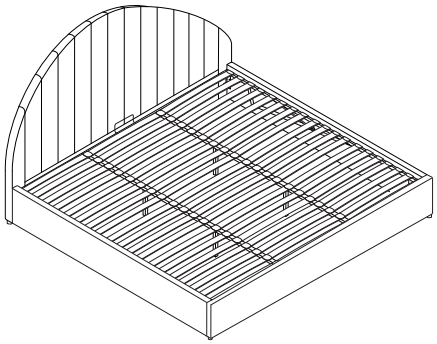

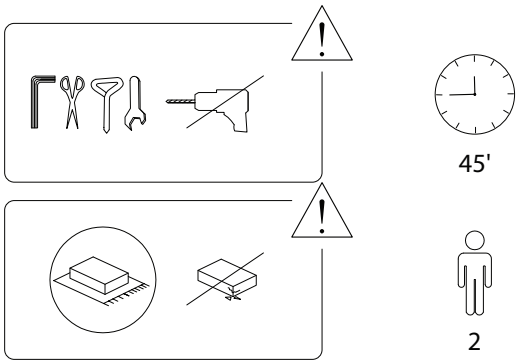

2138/CHADENET/190724/

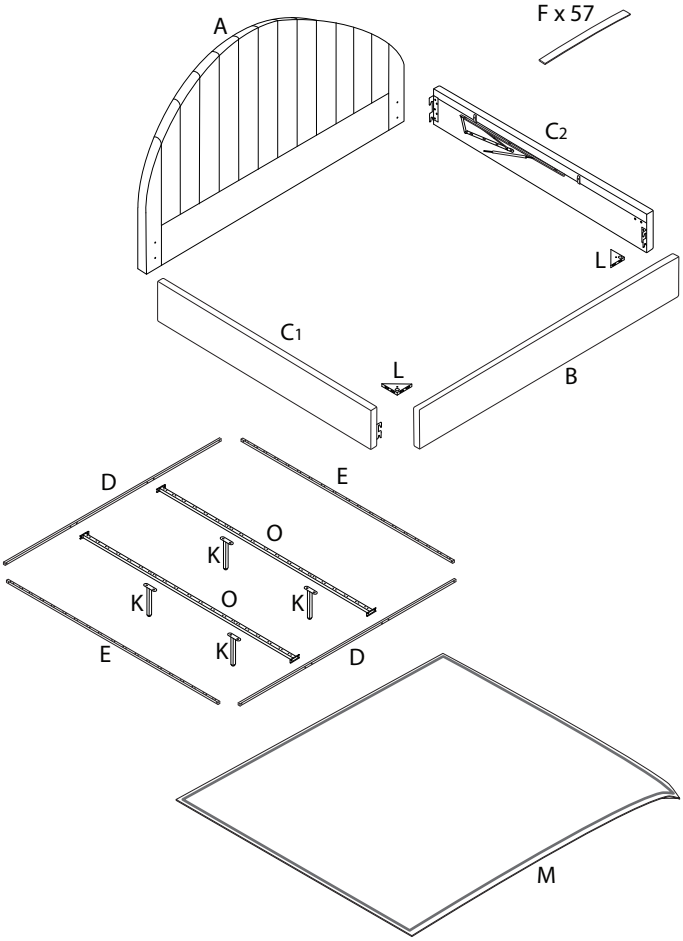

2138/CHADENET/190724/

A x 1	B x 1	C1 x 1
C2 x 1	D x 2	E x 2
F x 57	G x 38	H x 38
I x 4	J x 4	K x 4
L x 2	M x 1	N x 1

2138/CHADENET/190724/

O	P	1
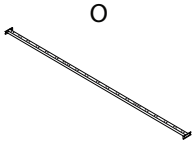		
x 2	x 1	x 16
2	3	4
		
x 22	x 22	x 8
5	6	7
		
x 8	x 1	x 1
8	9	10A
		
x 1	x 4	x 8
10B	11	
		
x 8	x 2	

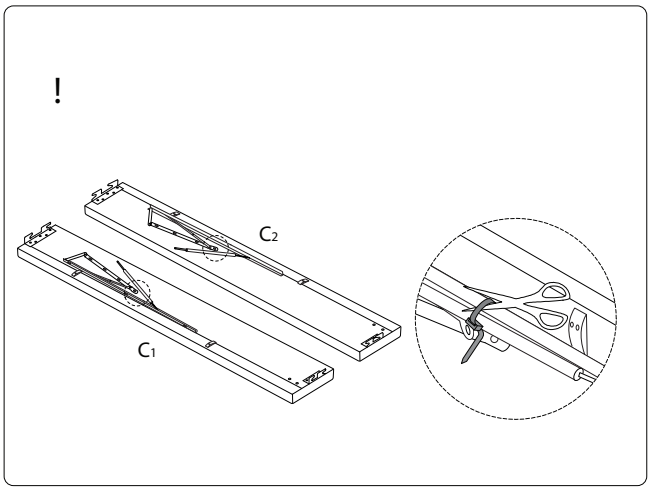

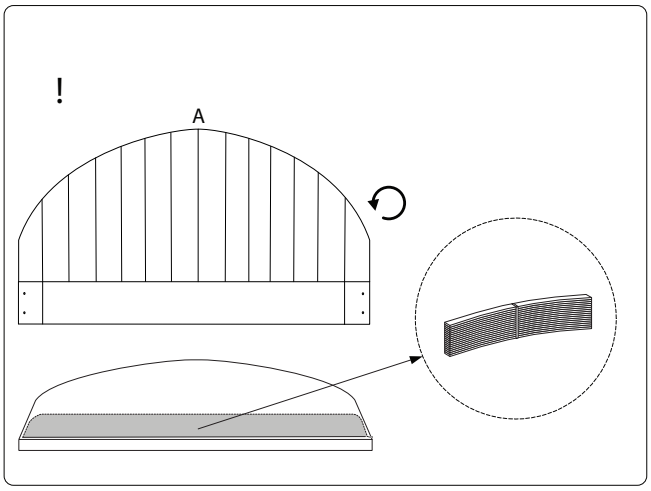

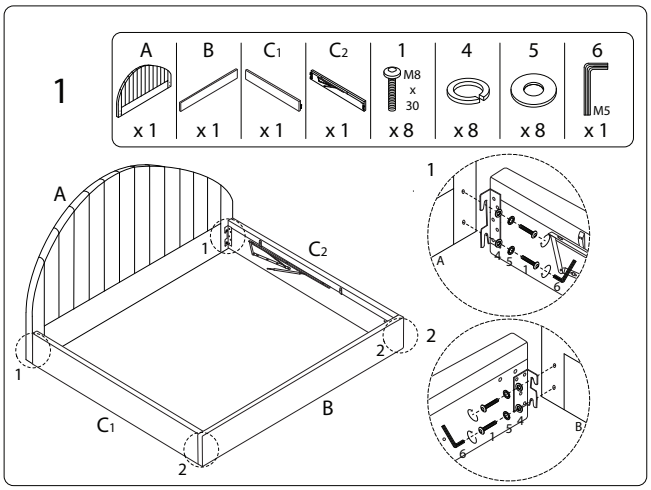

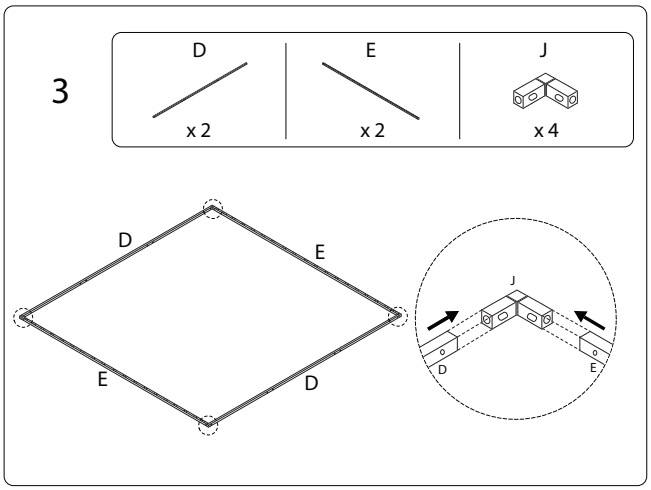

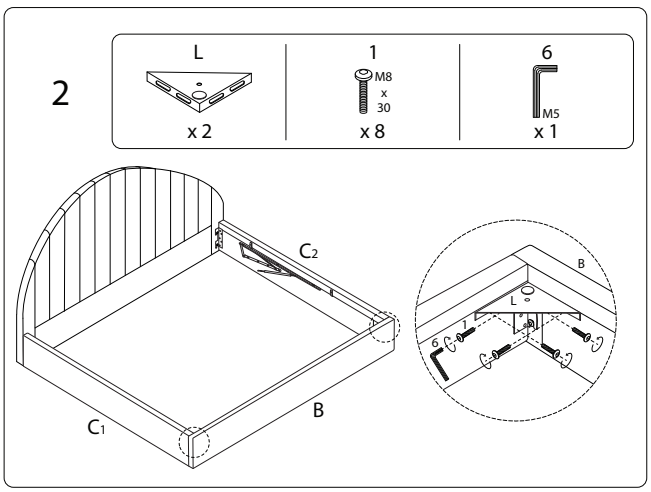

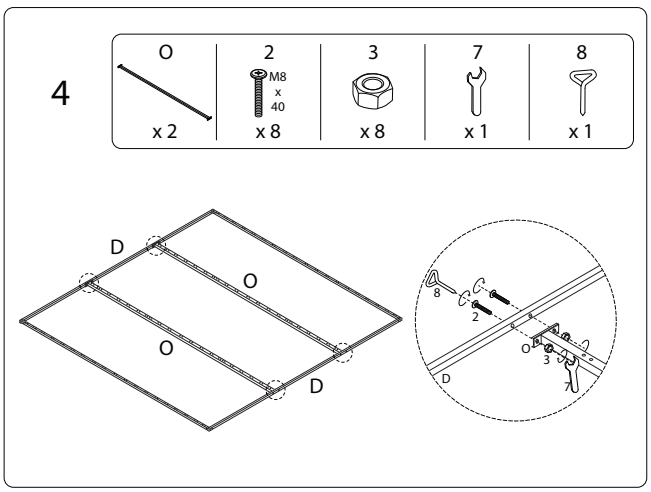

5

10A	10B	11
M6 x 20		M4
x 8	x 8	x 2

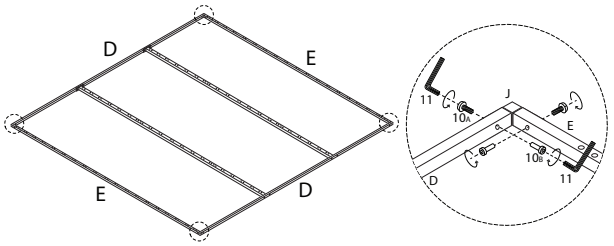

6

8
x 1

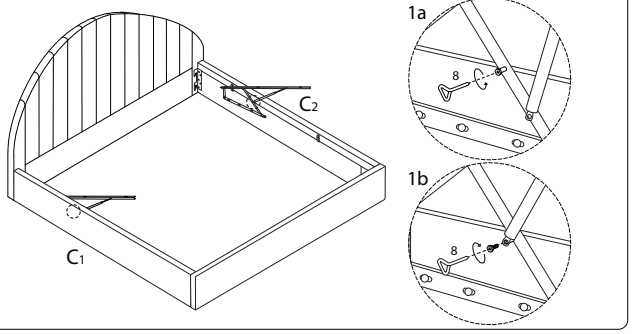

2138/CHADENET/190724/

7

M
x 1

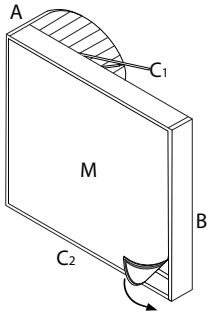

8

I	8	9
		M4 x 40
x 4	x 1	x 4

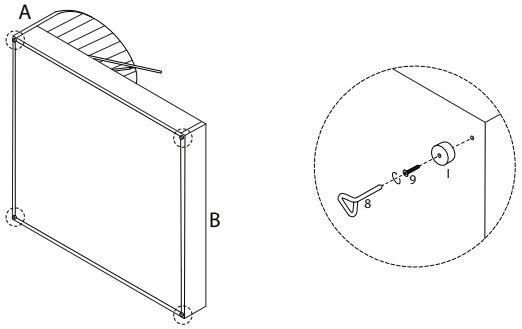

2138/CHADENET/190724/

9

2	3	7	8
M8 x 40			
x 6	x 6	x 1	x 1

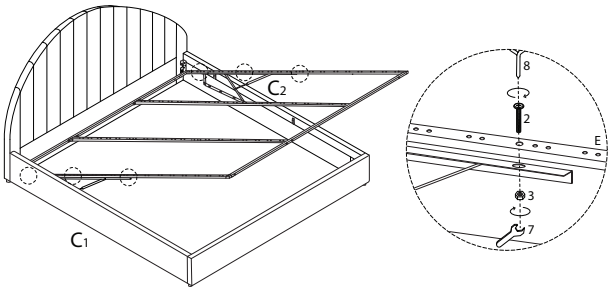

11

N
x 1

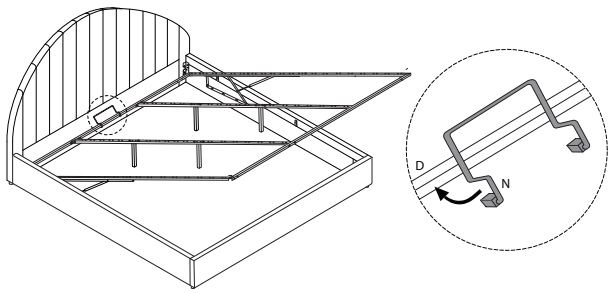

10

K	2	3	7	8
	M8 x 40			
x 4	x 8	x 8	x 1	x 1

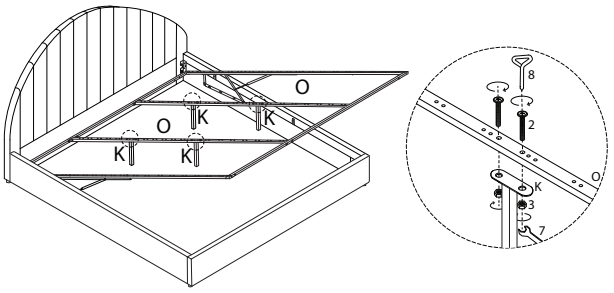

2138/CHADENET/190724/

!

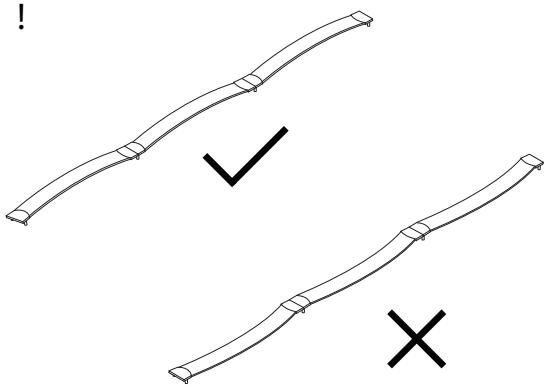

2138/CHADENET/190724/

12 x 19

F	G	H
x 3	x 2	x 2

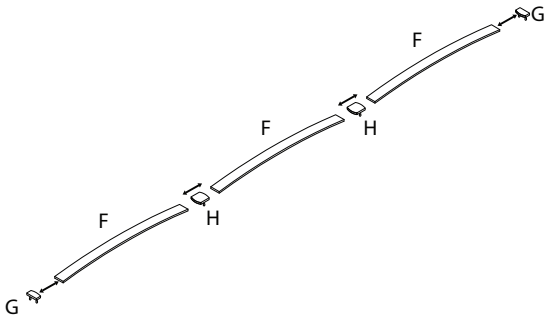

13

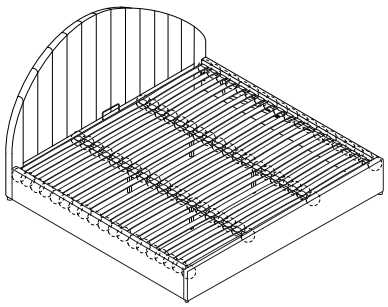

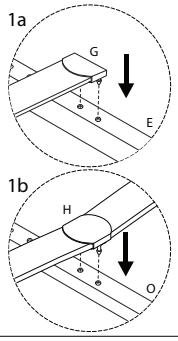

14

P
x 1

