

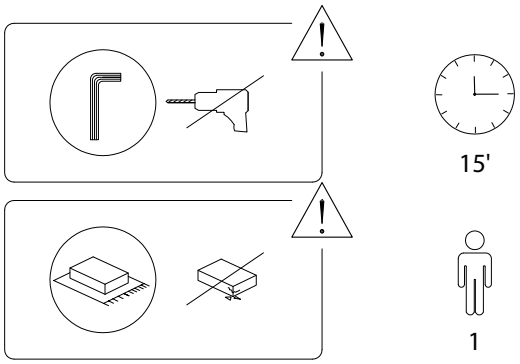
15'
1

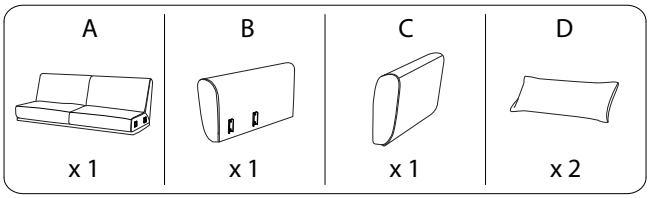
A
x 1
B
x 1
C
x 1
D
x 2

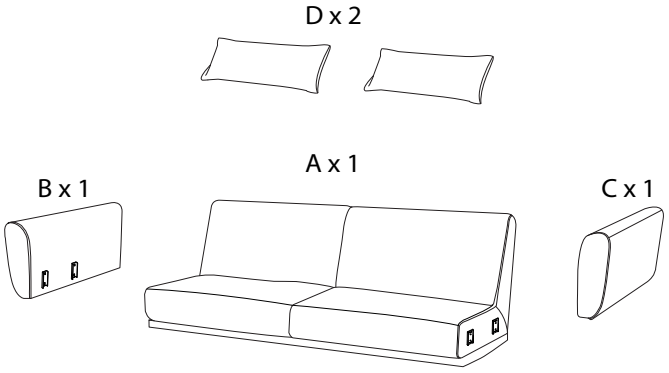
D x 2
A x 1
B x 1
C x 1

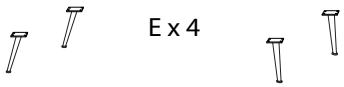
E x 4

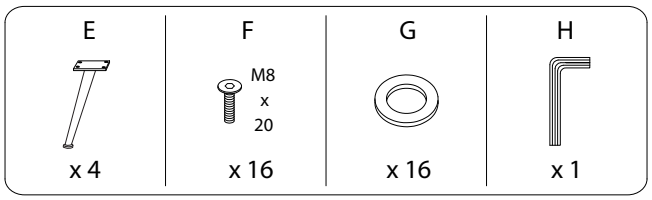
E
x 4
F
M8
x
20
x 16
G
x 16
H
x 1

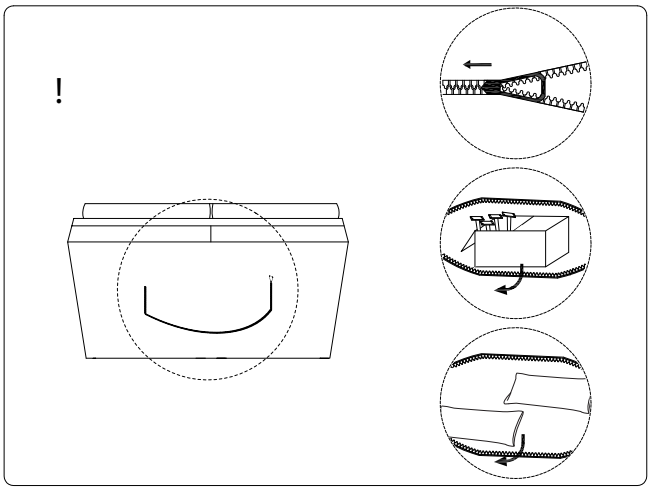
!

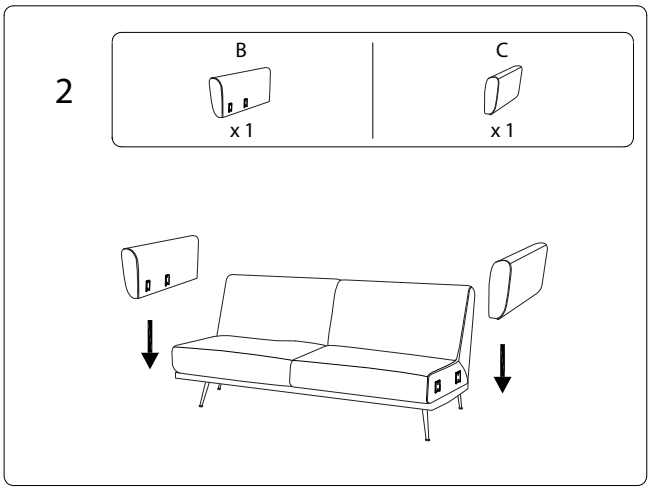
2
B
x 1
C
x 1

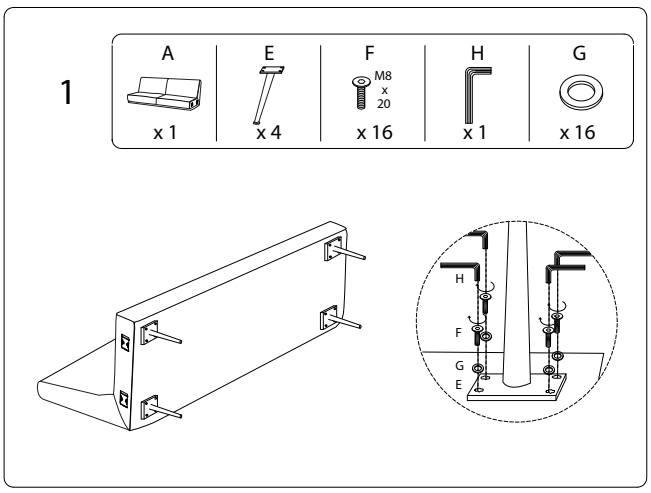
1
A
x 1
E
x 4
F
M8
x
20
x 16
H
x 1
G
x 16
H
F
G
E

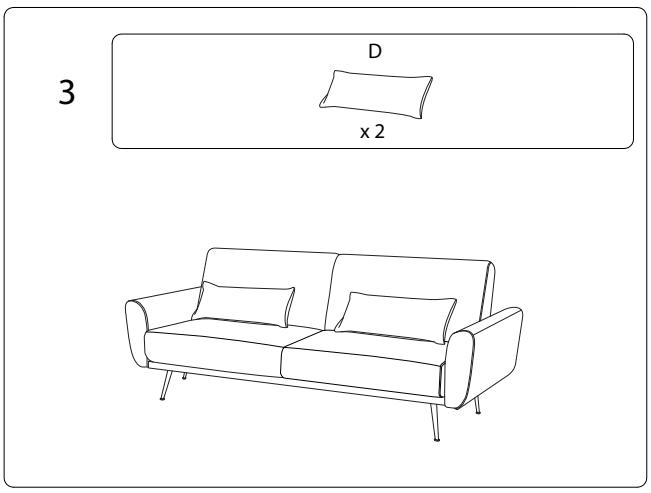
3
D
x 2