VERA

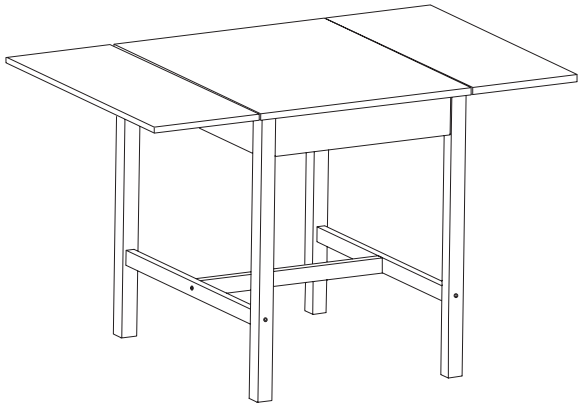

1/8

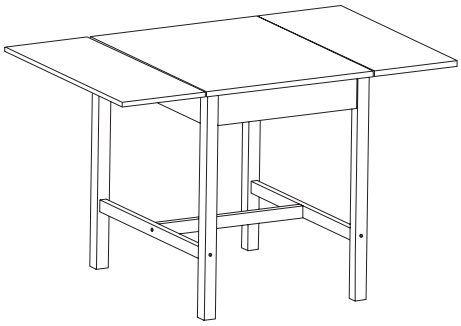

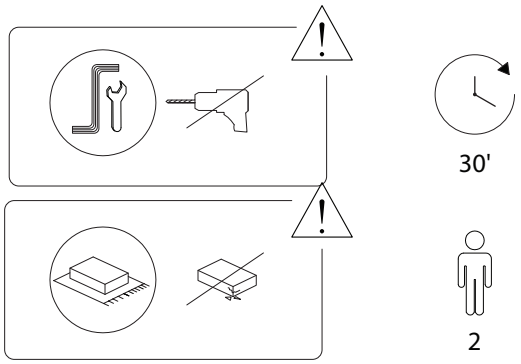

2/8

2653/VERA/300726

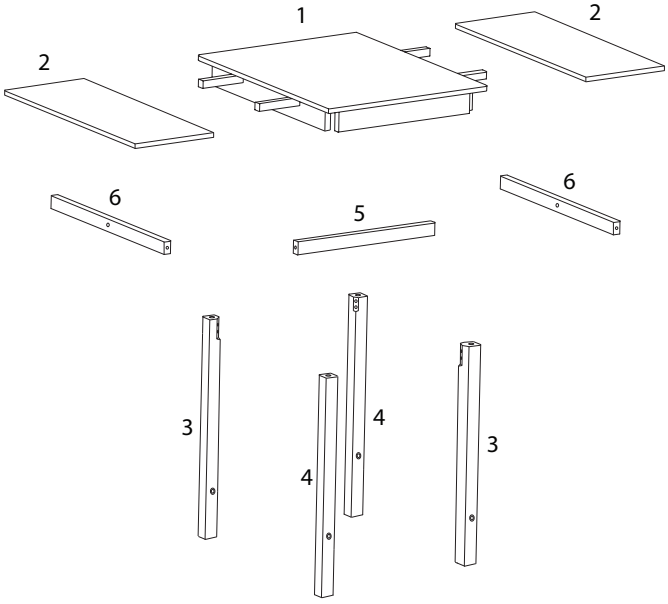

3/8

2653/VERA/300726

1 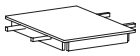 x 1	2  x 2	3  x 2	4  x 2
5  x 1	6 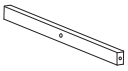 x 2	A  x 8	B  x 4
C  x 8	D  x 8	E  x 36	F 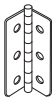 x 6
G  x 1	H  x 1	I  x 6	K  x 4

4/8

2653/VERA/300726

1

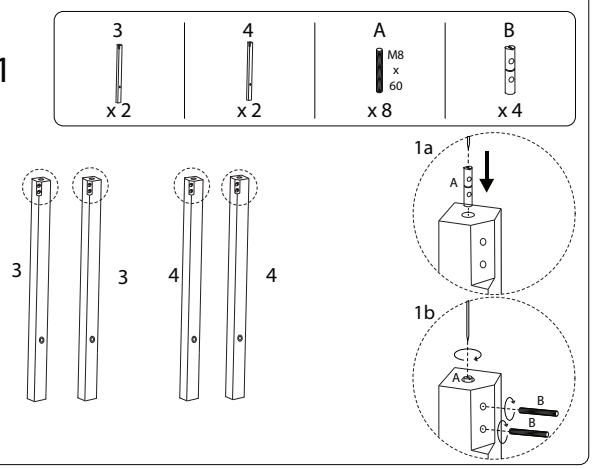
3
x 2
4
x 2
A
M8
x
60
x 8
B
x 4
3
3
4
4
1a
A
1b
A
B
B

2

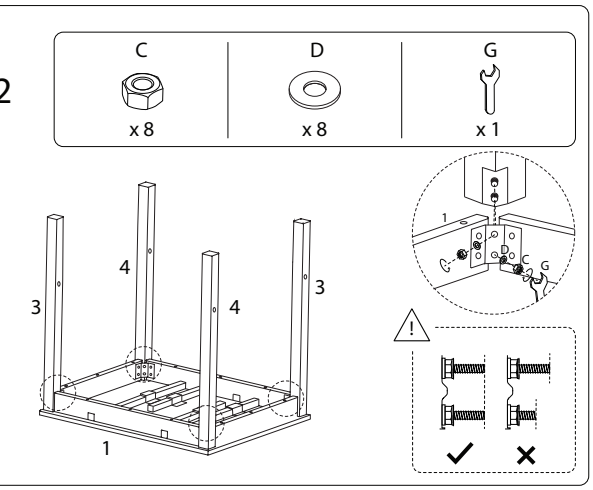
C
x 8
D
x 8
G
x 1
4
3
3
4
1
1
D
C
G

3

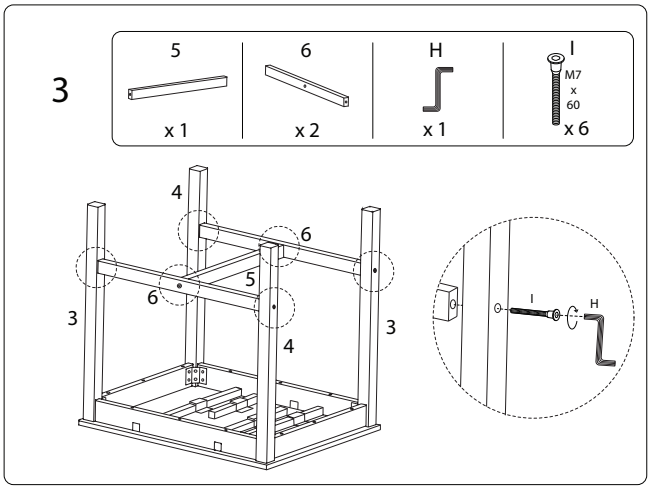
5
x 1
6
x 2
H
x 1
I
M7
x
60
x 6
4
6
5
6
3
3
4
I
H

4

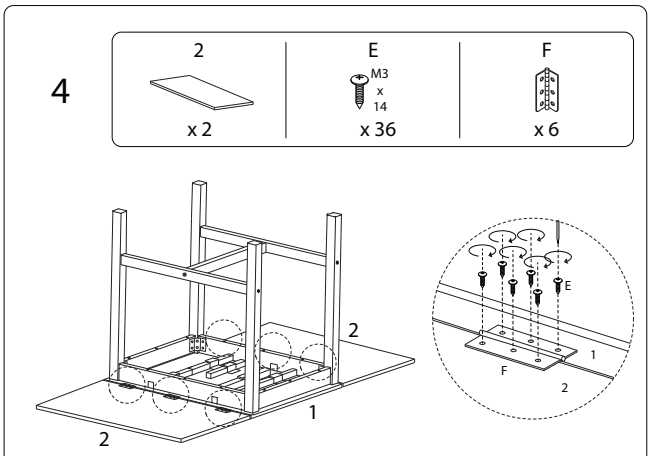
2
x 2
E
M3
x
14
x 36
F
x 6
2
1
2
E
1
F
2

5

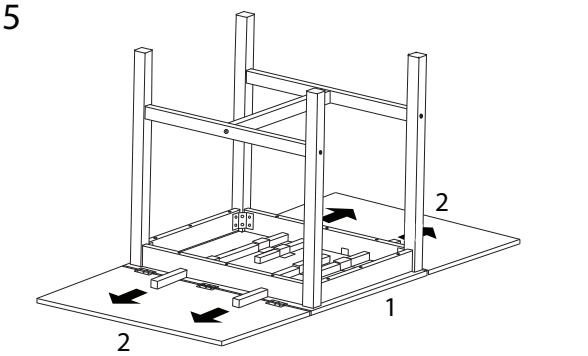
2
1
2

6

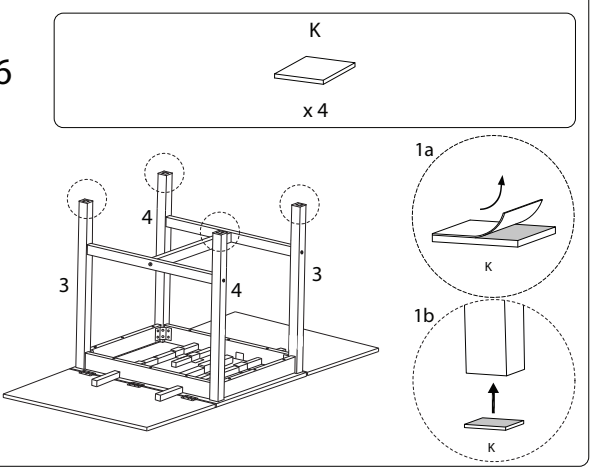
K
x 4
4
3
3
4
1a
K
1b
K

!

