TARIJA

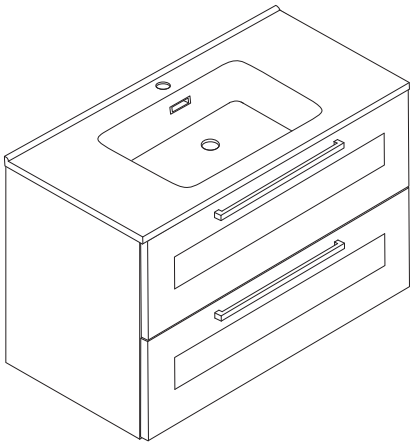

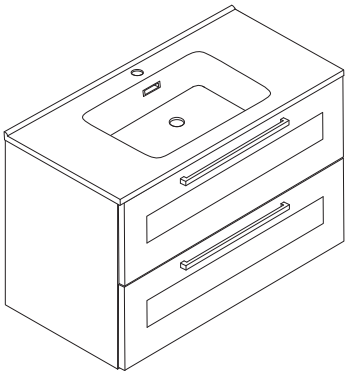

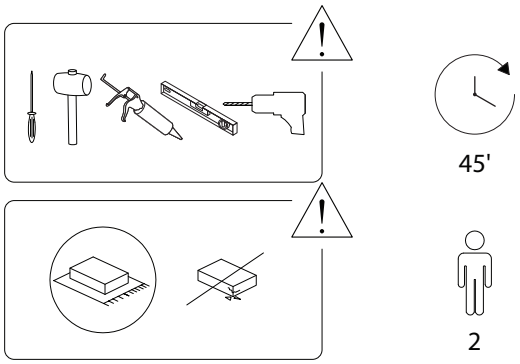
45'
2

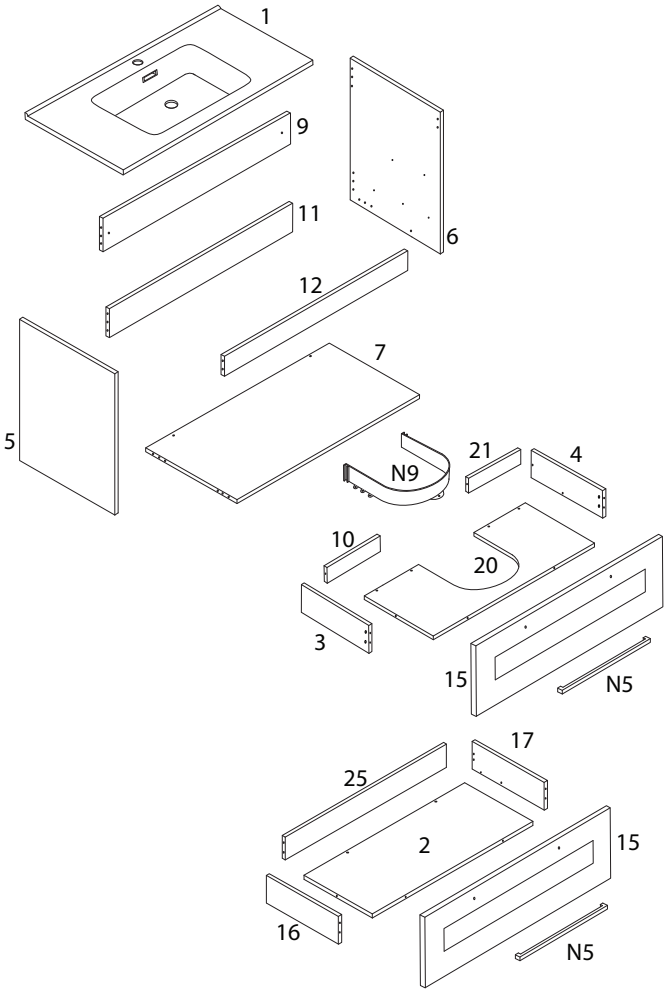
1
9
11
6
12
7
5
N9
21
4
10
20
3
15
N5
17
25
2
15
16
N5

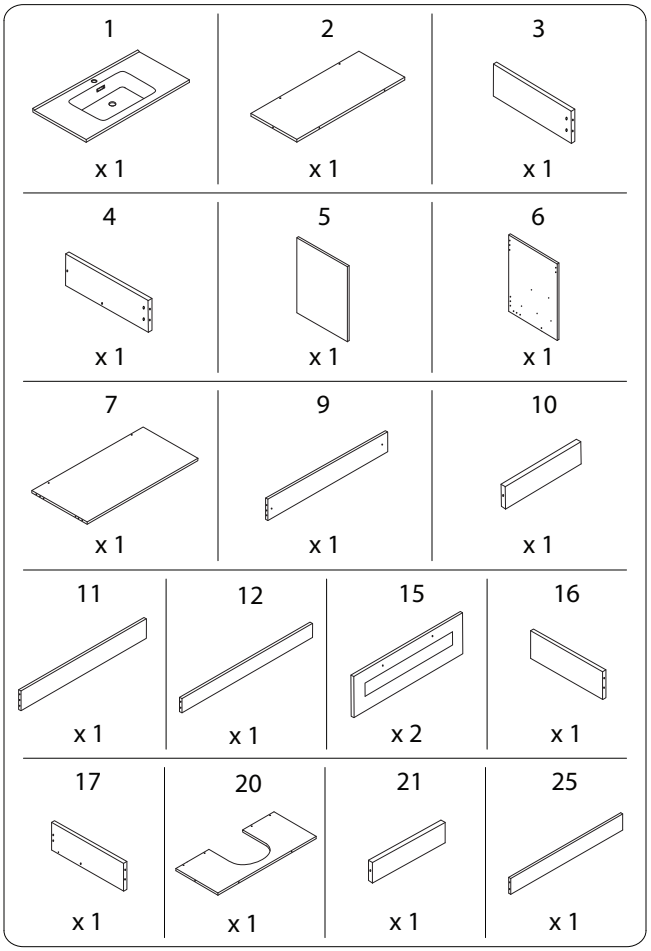
1
x 1
2
x 1
3
x 1
4
x 1
5
x 1
6
x 1
7
x 1
9
x 1
10
x 1
11
x 1
12
x 1
15
x 2
16
x 1
17
x 1
20
x 1
21
x 1
25
x 1

N1 x 44	N2 x 44	
N4 x 12	N5 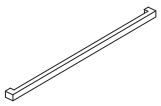 x 2	
N7L 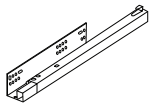 x 2	N7R 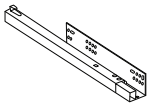 x 2	
N8 M4 x 22 x 4	N9 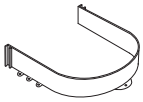 x 1	N10 M4 x 14 x 41
N13₁ 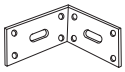 x 2	N13₂ M6 x 70 x 2	N13₃ x 2

1

5	6	7	9	11	N1	N4
x 1	x 1	x 1	x 1	x 1	x 18	x 12

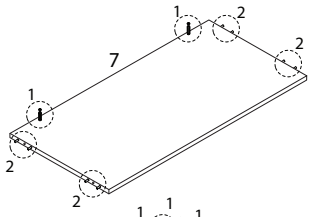

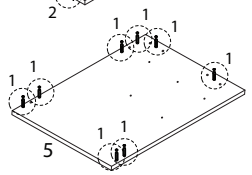

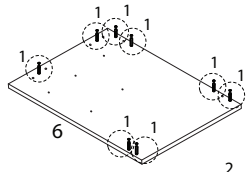

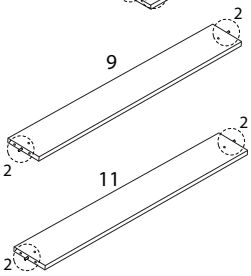

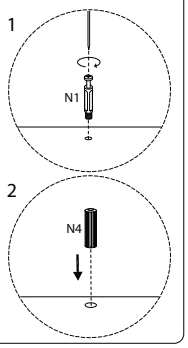

2

2	3	4	15	16	17	20	N1
x 1	x 1	x 1	x 2	x 1	x 1	x 1	x 26

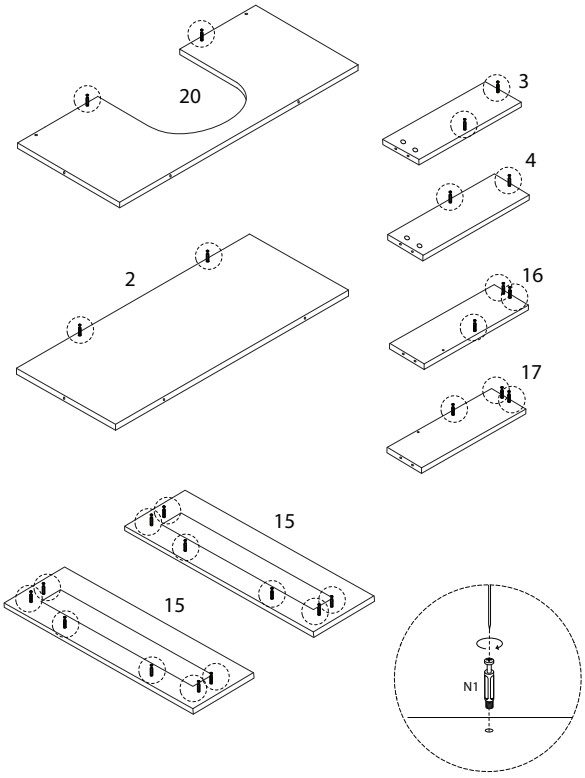

3

N2 x 2

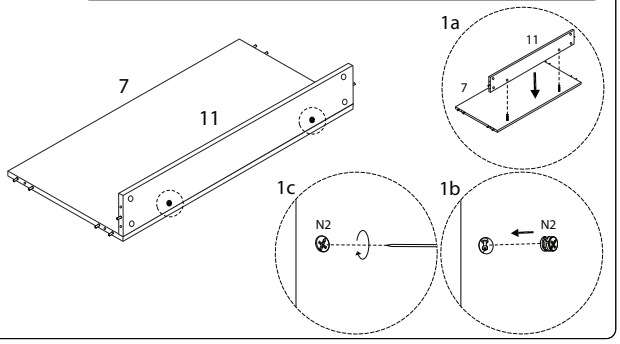

4

N2 x 6

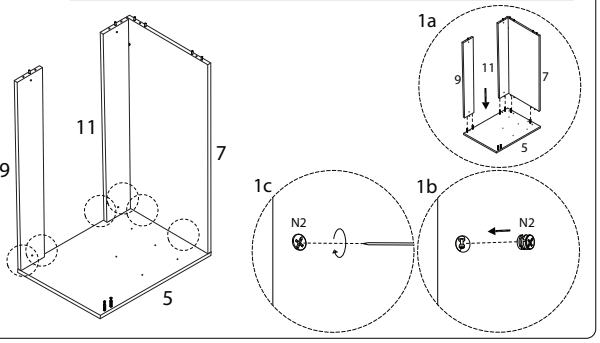

5

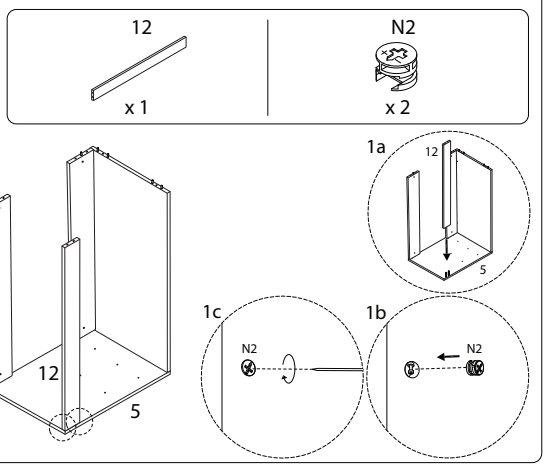

6

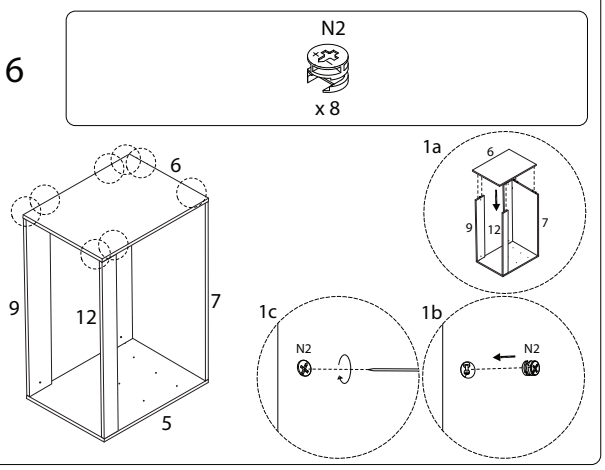

7

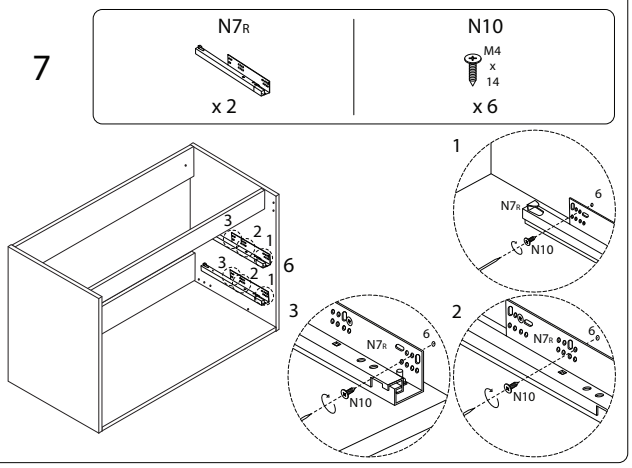

8

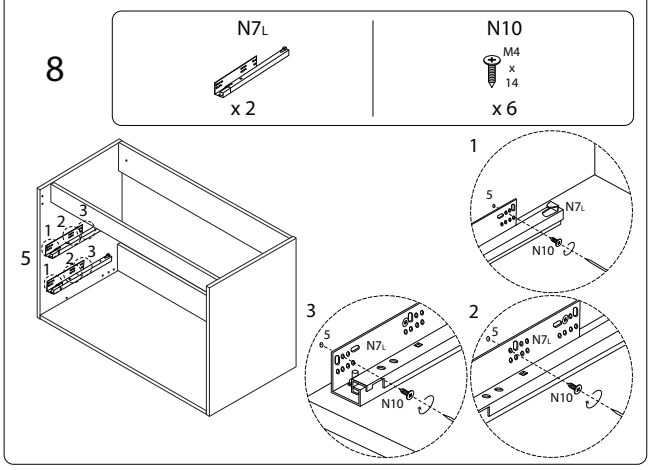

9

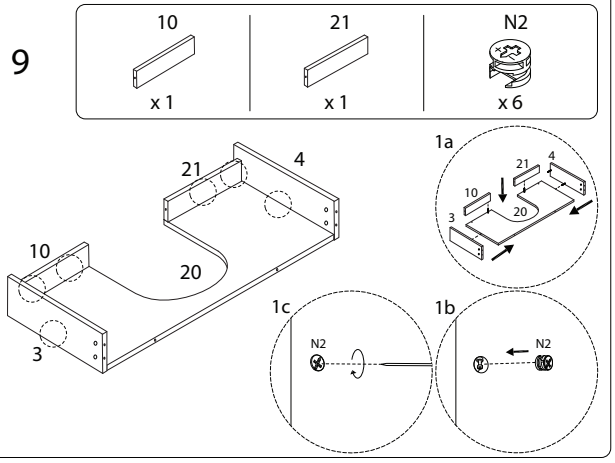

10

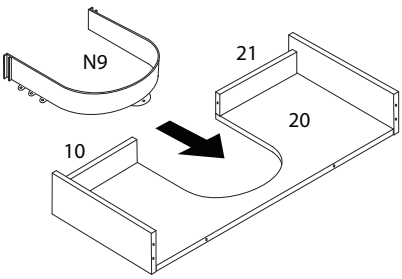

11

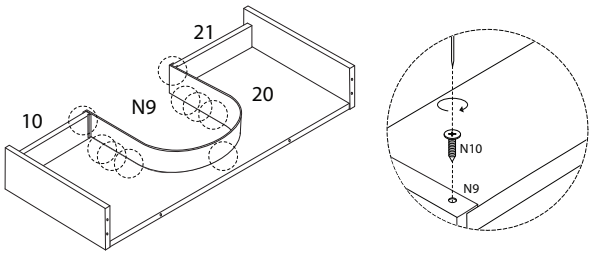

12

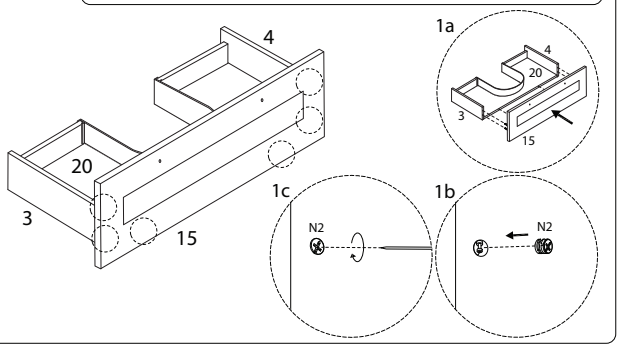

13

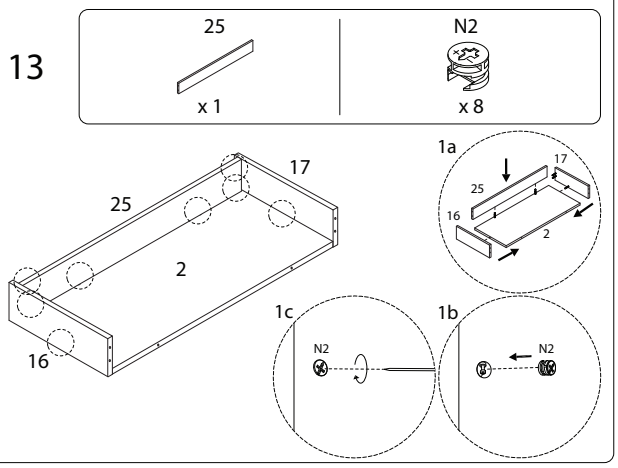

14

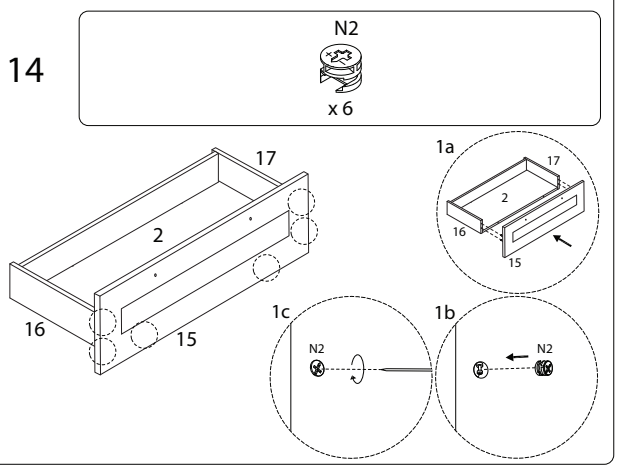

15

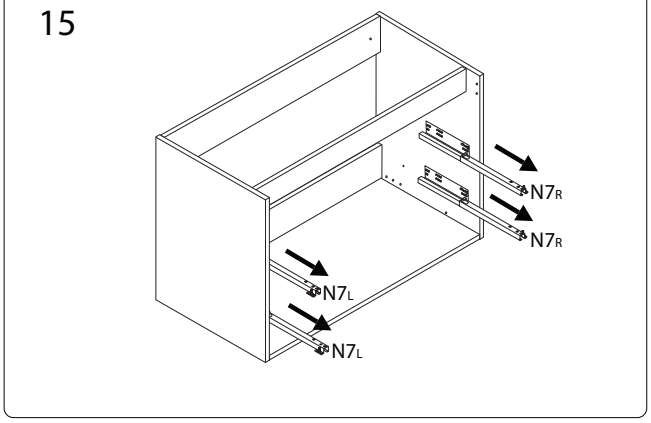

16

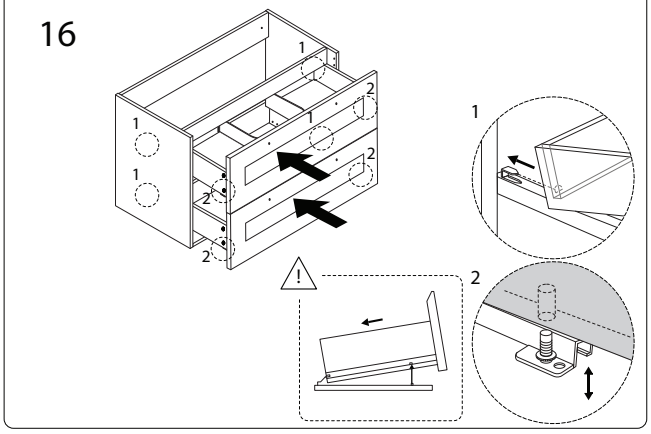

17

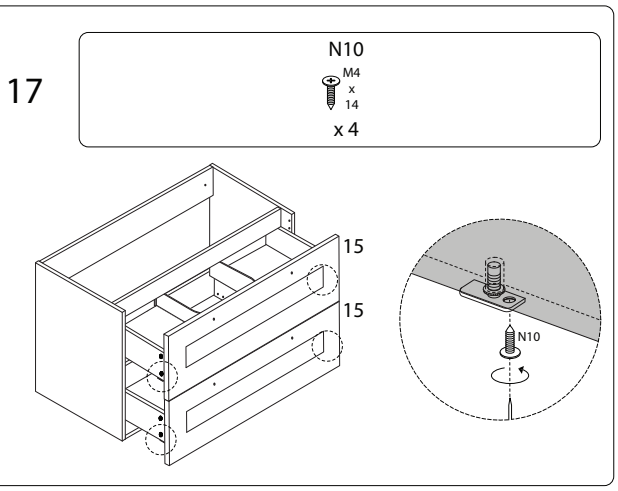

18

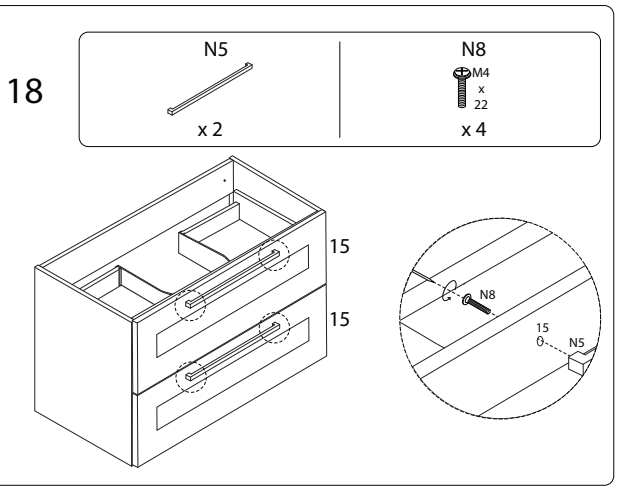

19

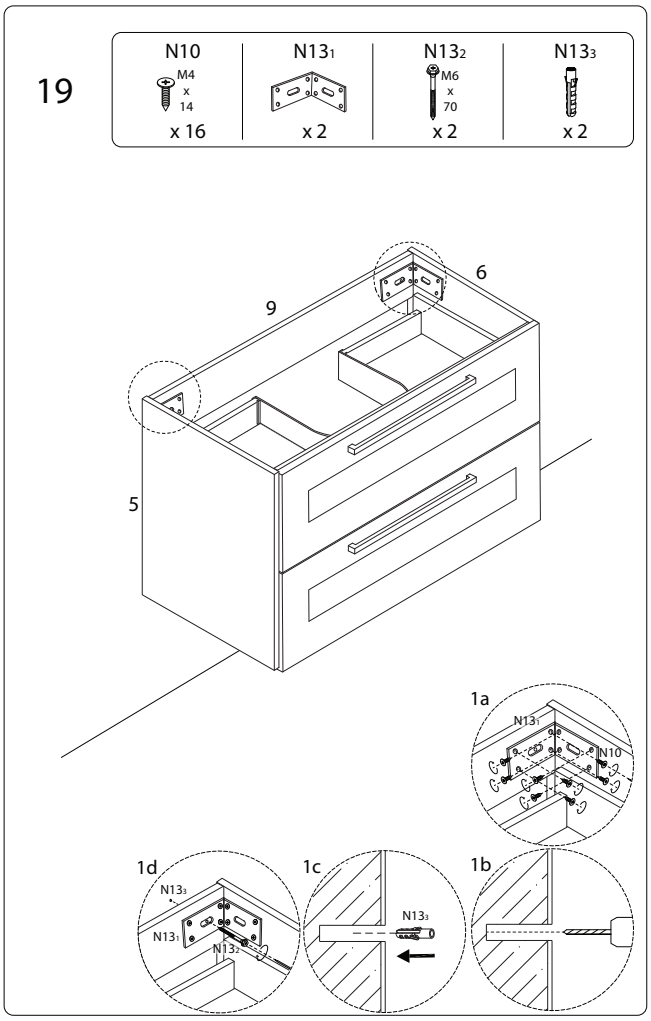

20

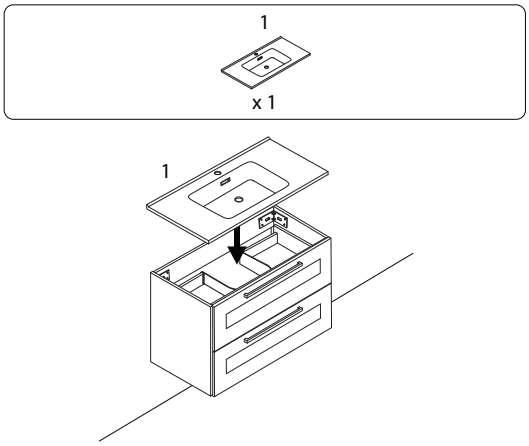

!

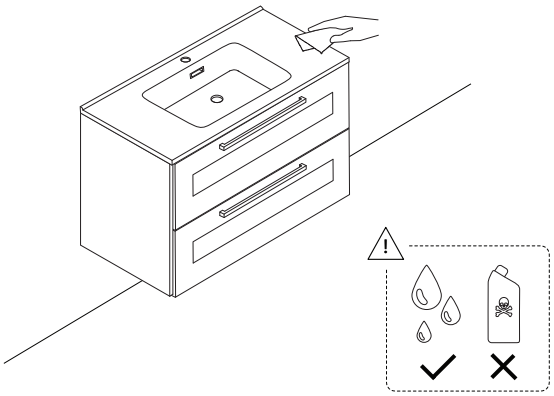
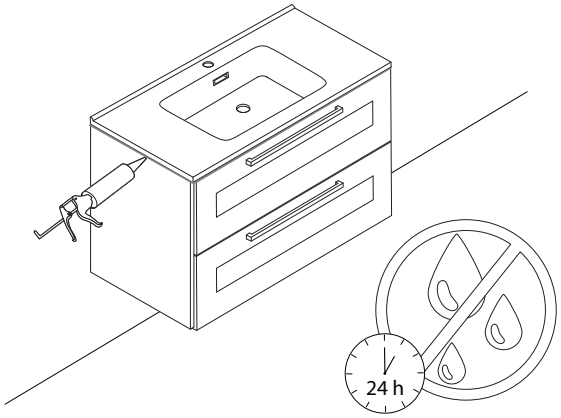
21