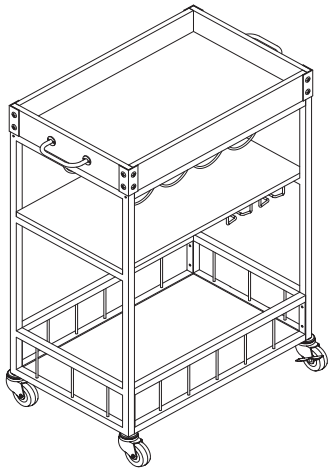

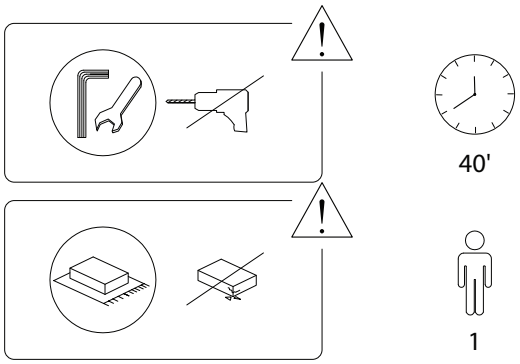

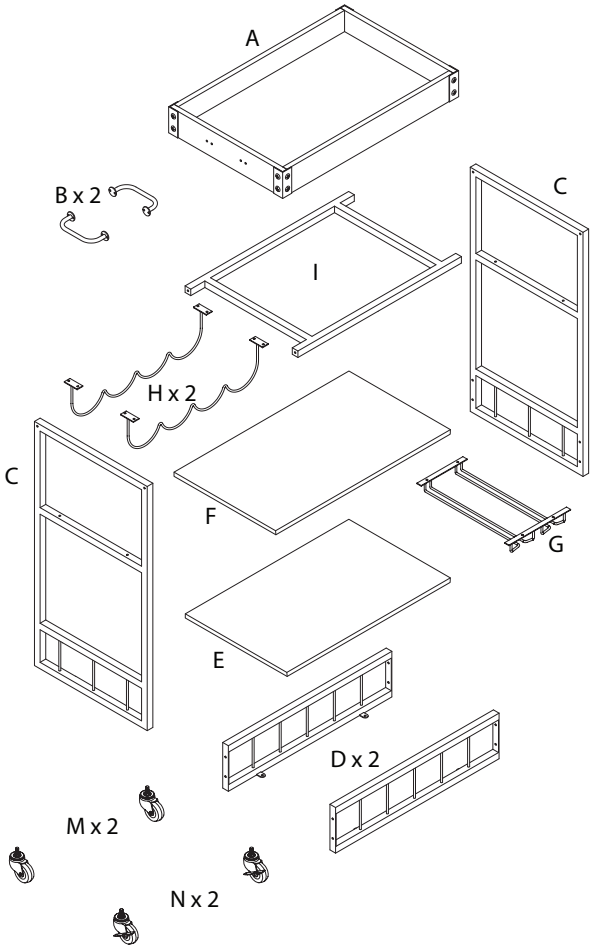

A 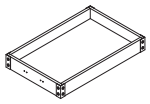 x 1	B  x 2	C 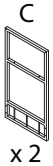 x 2
D 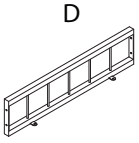 x 2	E 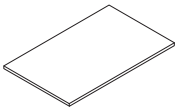 x 1	F 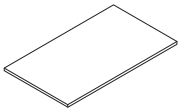 x 1
G 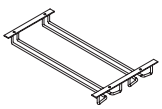 x 1	H 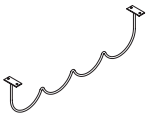 x 2	I 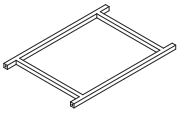 x 1
J  x 32	K  x 8	L  x 1
M  x 2	N  x 2	O  x 1

1

F	G	J	L
 x 1	 x 1	 x 4	 x 1

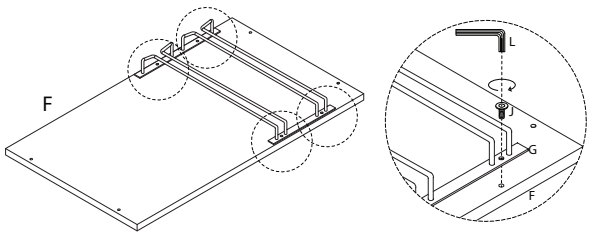

2

H	I	J	L
 x 2	 x 1	 x 8	 x 1

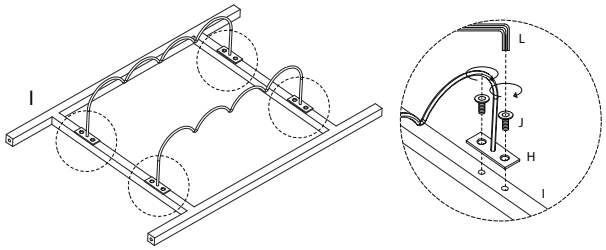

3

A	B	J	L
x 1	x 2	x 8	x 1

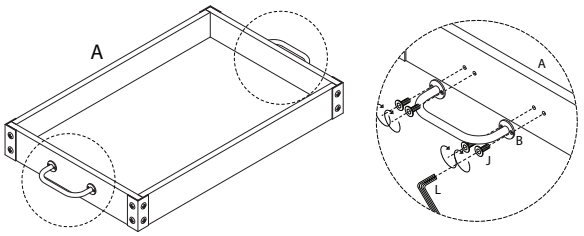

4

C	D	J	L
x 2	x 2	x 8	x 1

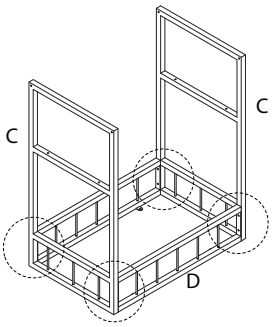

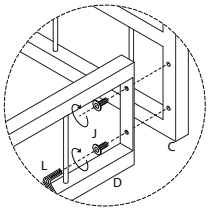

810/HULLET/191022/

5

K	L
x 4	x 1

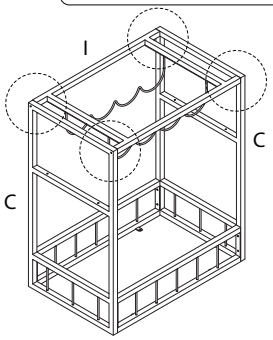

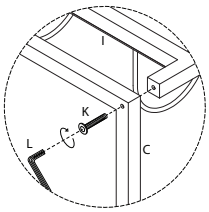

6

E	K	L
x 1	x 4	x 1

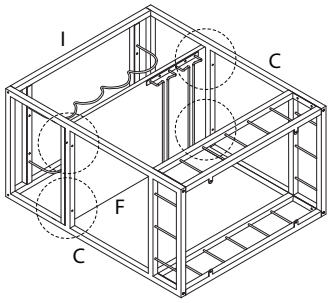

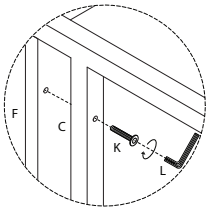

810/HULLET/191022/

7

J	L
x 4	x 1

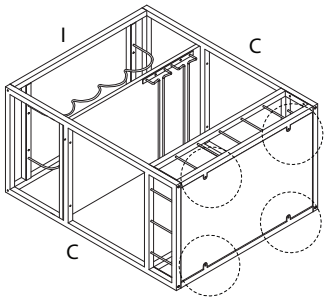

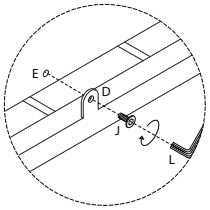

8

M	N	O
x 2	x 2	x 1

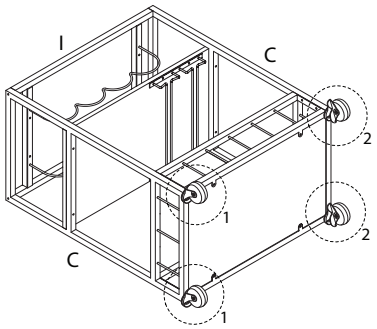

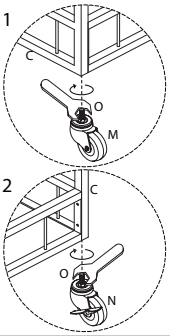

810/HULLET/191022/

9

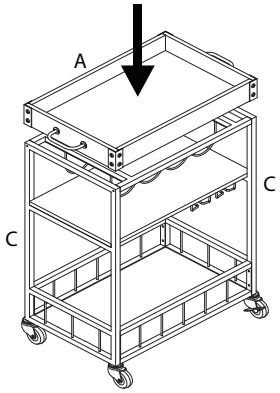

810/HULLET/191022/