HAMINA

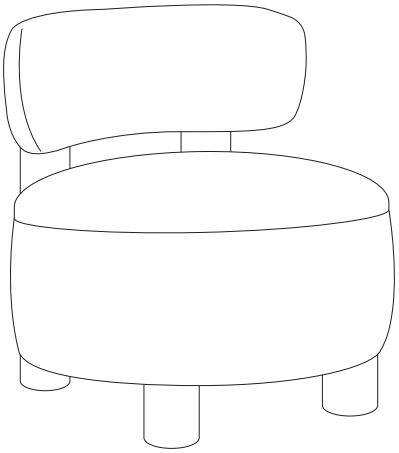

1/7

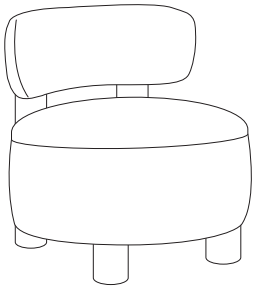

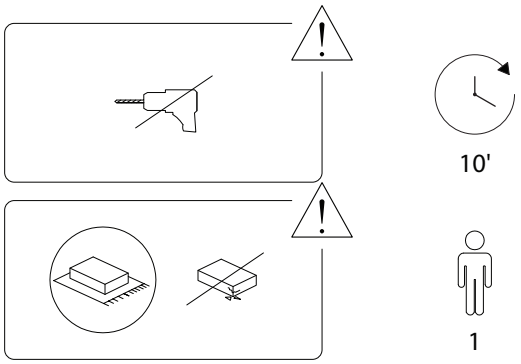

2/7

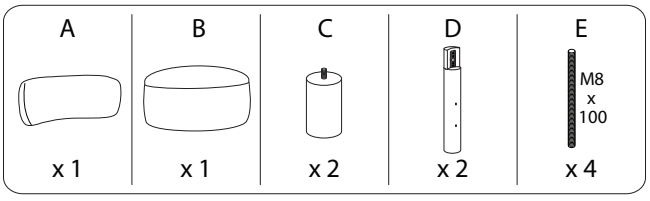

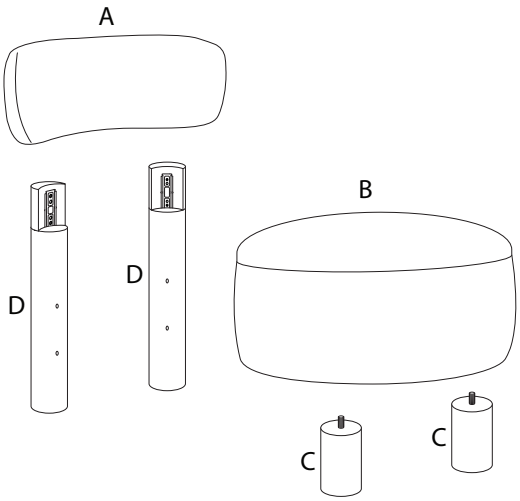

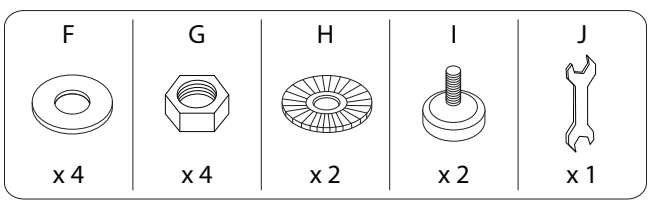

3/7

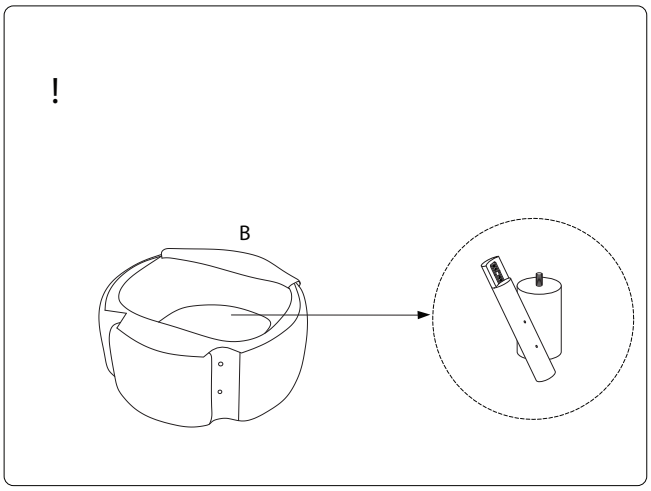

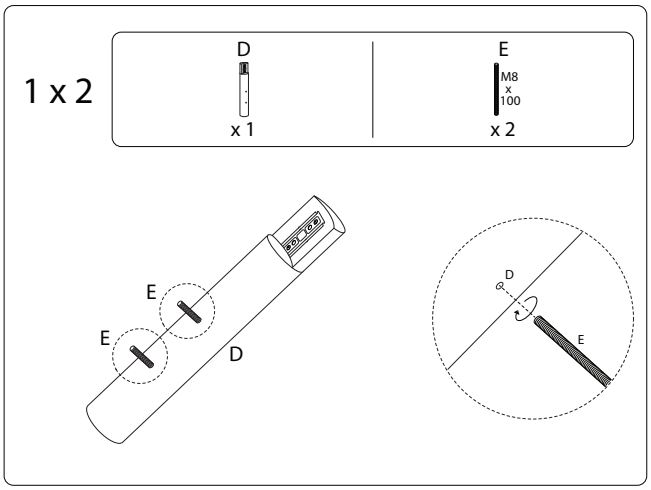

4/7

2 x 2

I
x 1

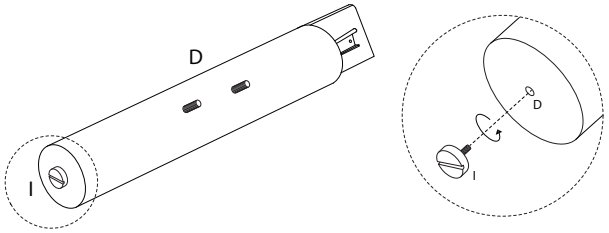

4

C
x 2

H
x 2

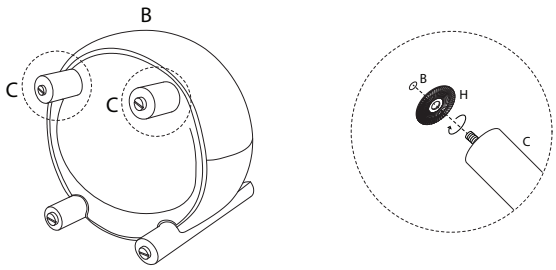

3

F
x 4

G
x 4

J
x 1

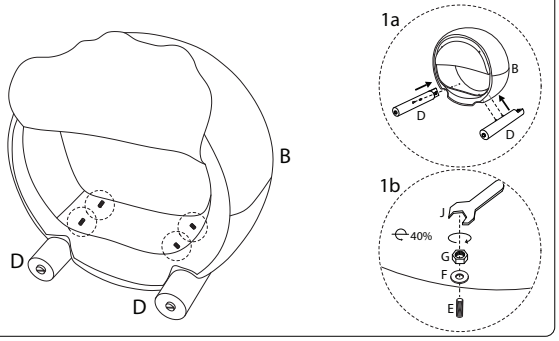

5

A
x 1

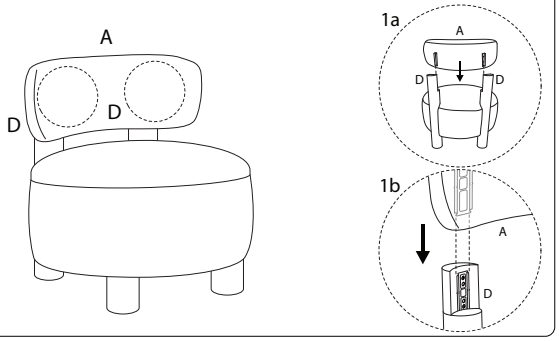

6

J
x 1

