MIMILI

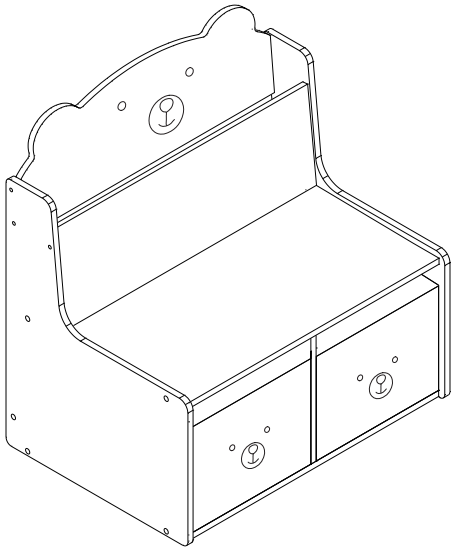

1/12

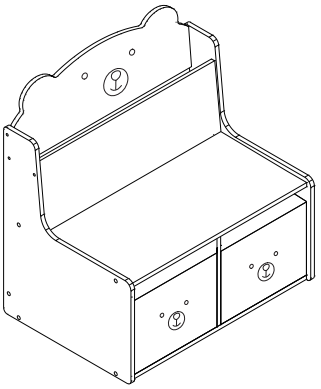

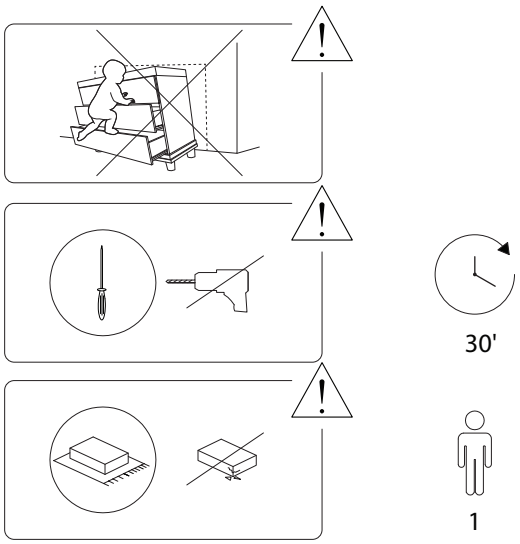

2/12

2341/MIMILI/081026

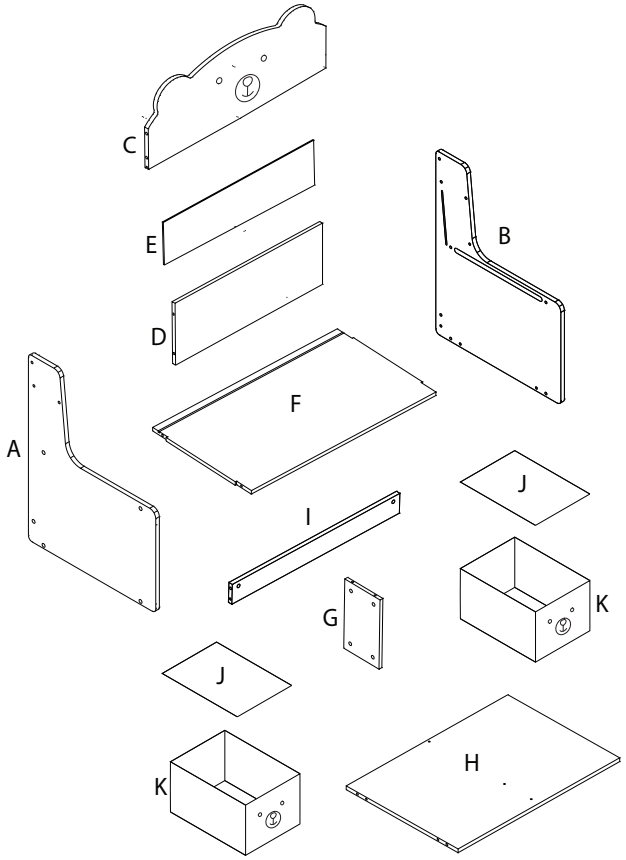

3/12

2341/MIMILI/081026

A	B	C	D
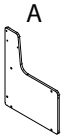		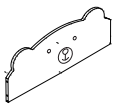	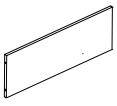
x 1	x 1	x 1	x 1
E	**F**	**G**	**H**
	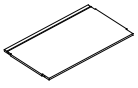	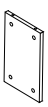	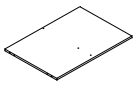
x 1	x 1	x 1	x 1
I	**J**	**K**	**1**
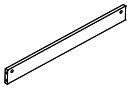	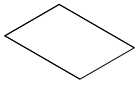		
x 1	x 2	x 2	x 1

2	3	4	5	6
		 M6 x 40		 M4 x 30
x 4	x 8	x 16	x 16	x 1

4/12

2341/MIMILI/081026

1

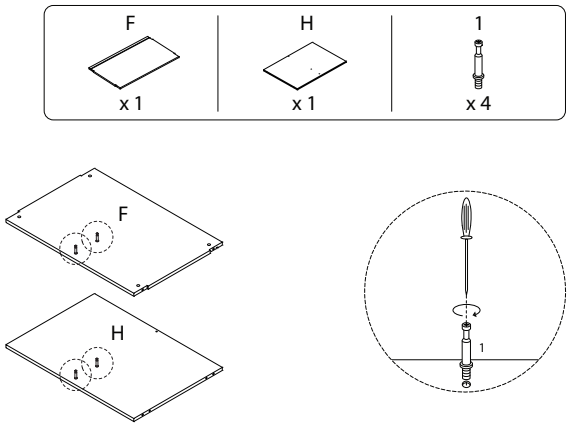

2

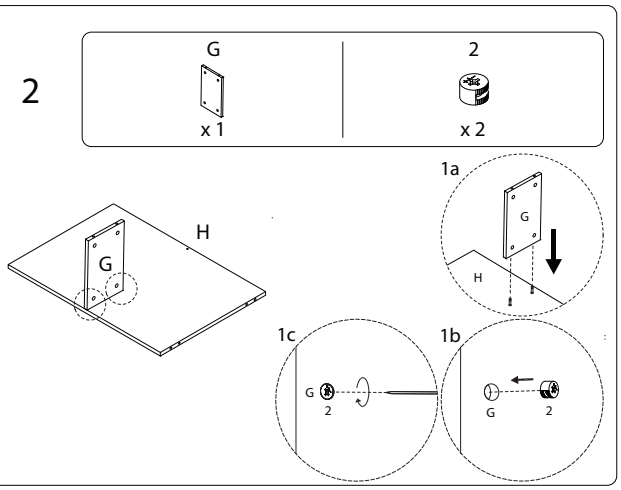

2341/MIMILI/081026

3

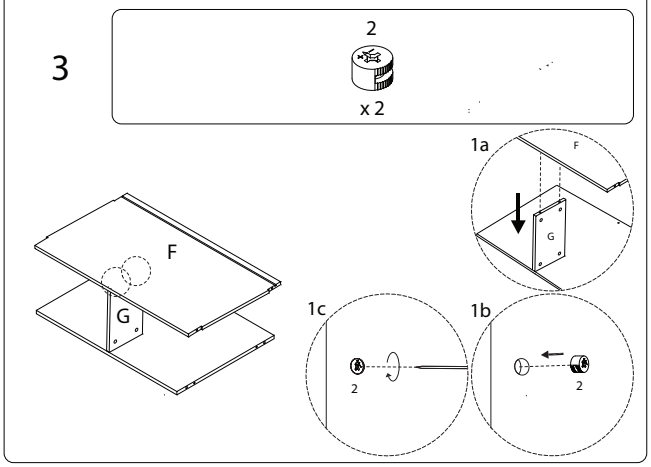

4

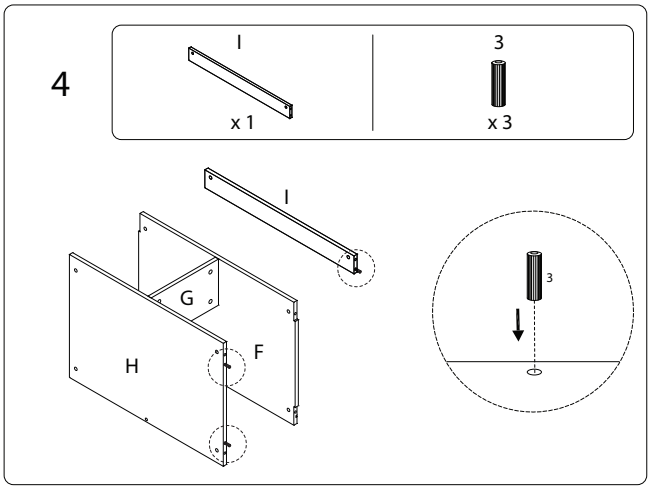

2341/MIMILI/081026

5

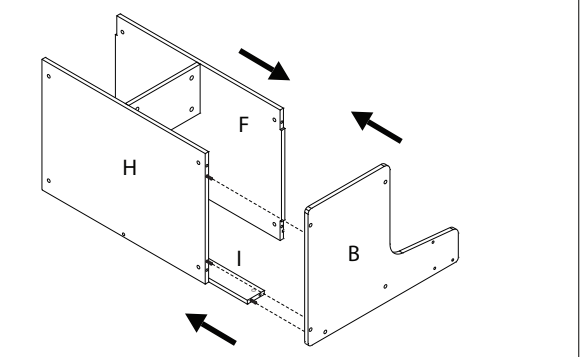

6

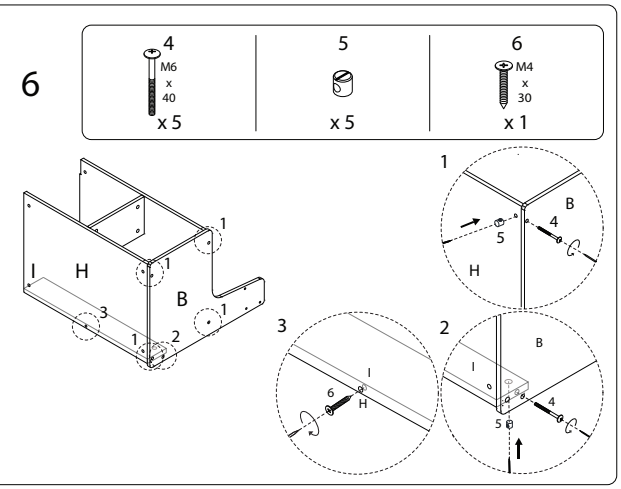

2341/MIMILI/081026

7

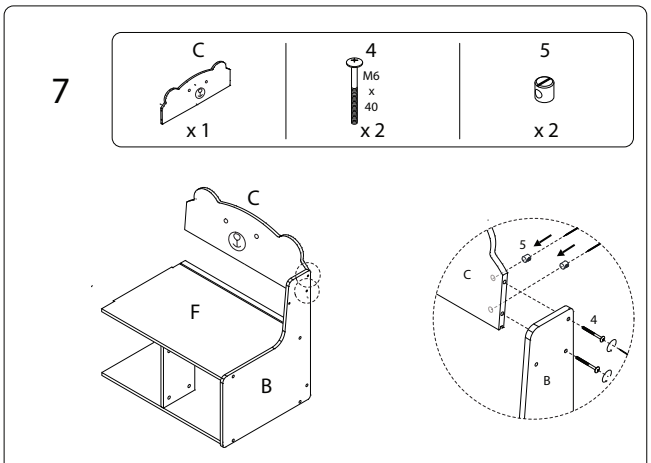

8

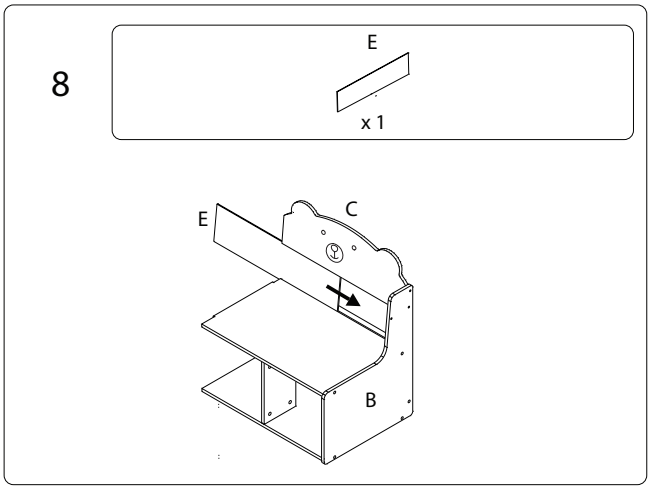

2341/MIMILI/081026

9

D x 1

3 x 1

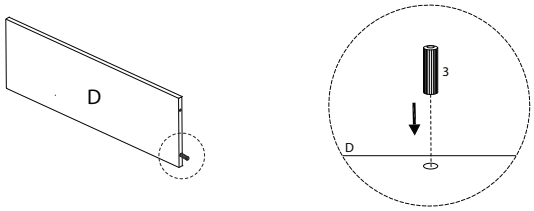

10

4 x 1

5 x 2

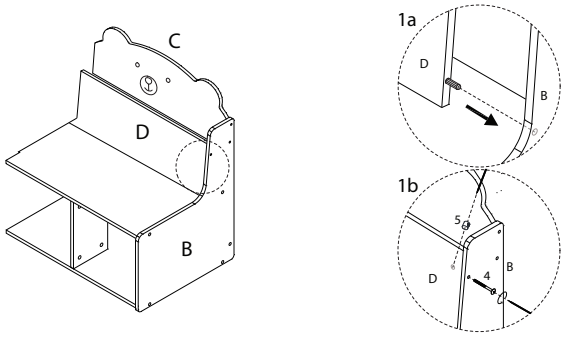

11

A x 1

3 x 4

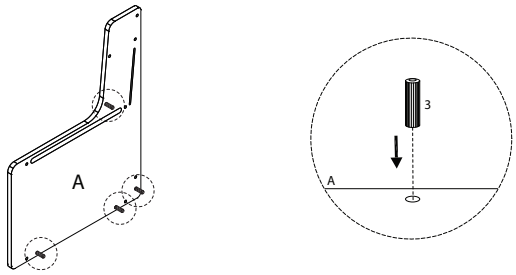

12

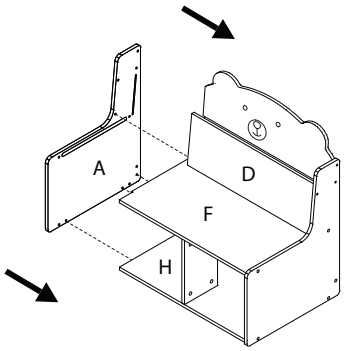

13

4 M6 x 40 x 8

5 x 8

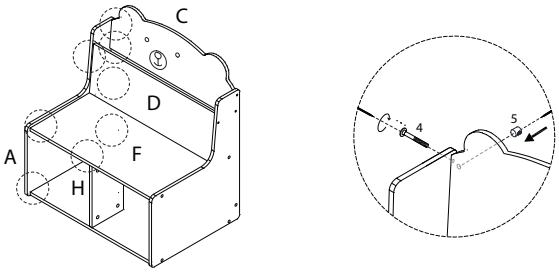

14 x 2

J x 1

H x 1

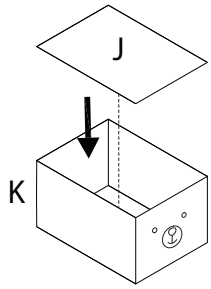

15

