TREMONT

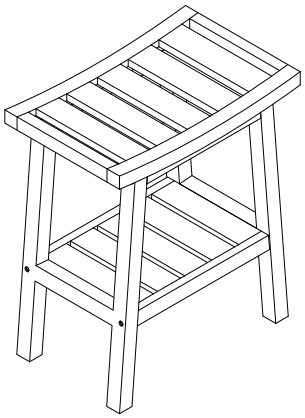

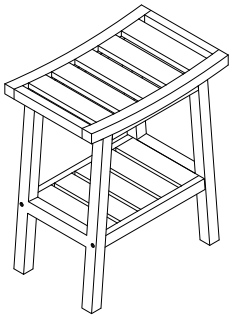

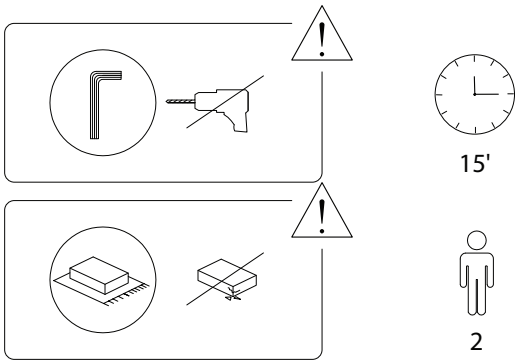

1/4

2213/TREMONT/220524/

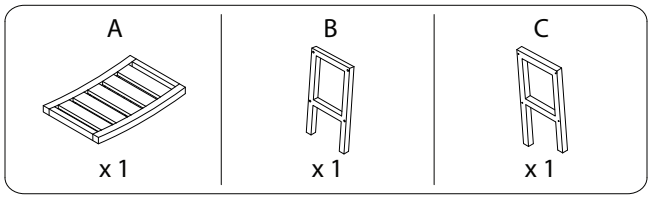

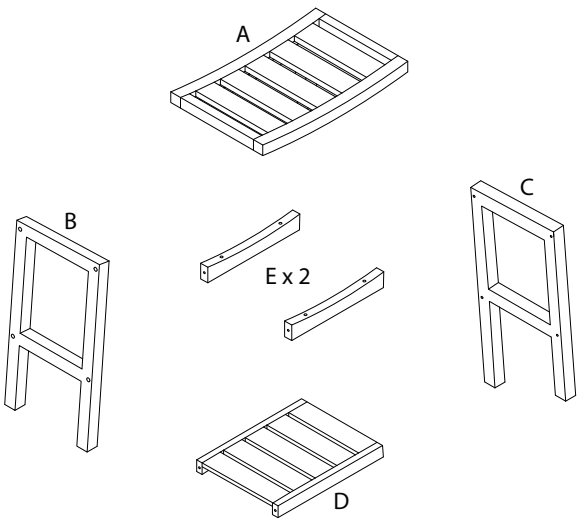

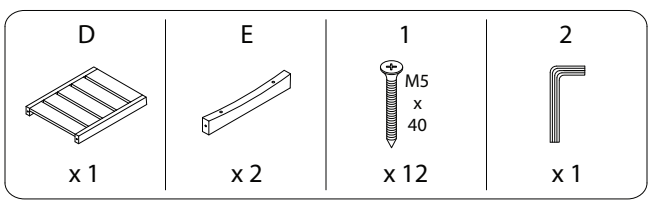

2/4

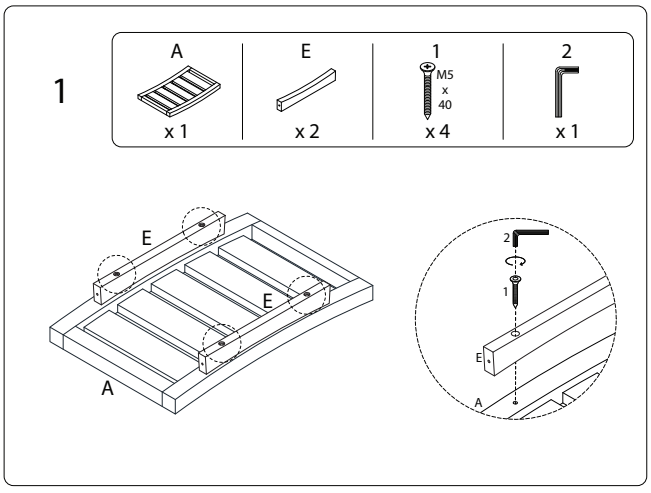

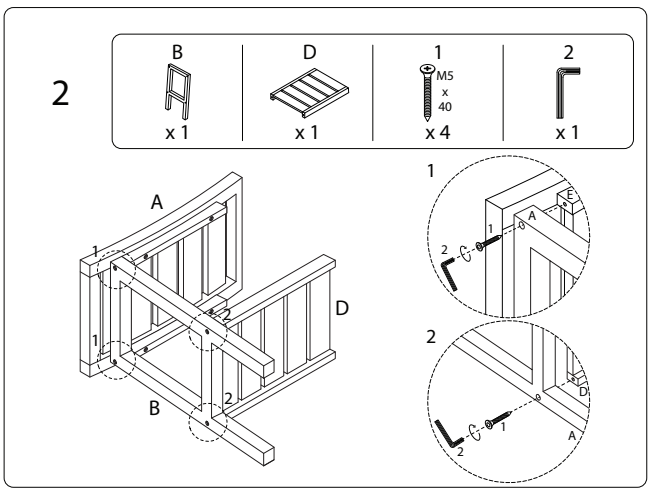

3/4

3

C	1	2
	 M5 x 40	
x 1	x 4	x 1

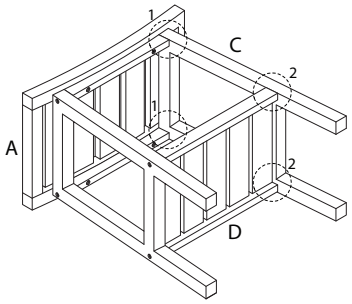

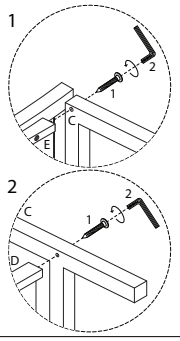

2213/TREMONT/220524/