RENDERS

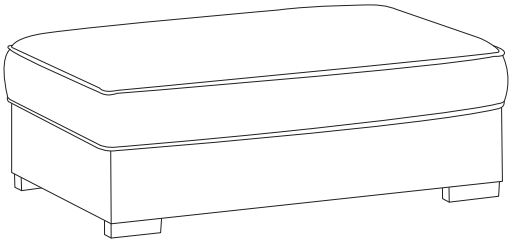

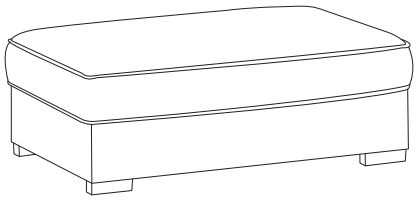

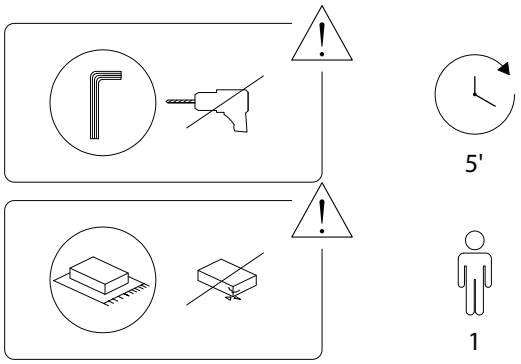

1/4

2117/RENDERS/050825/

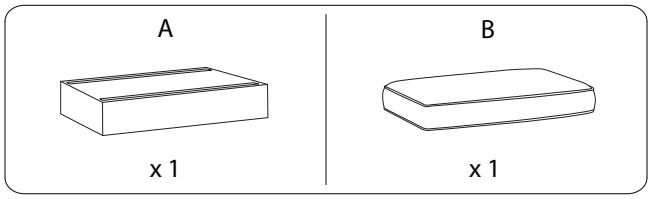

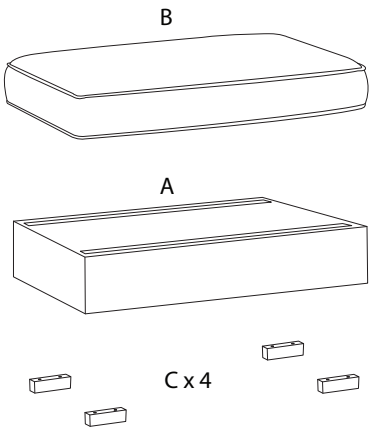

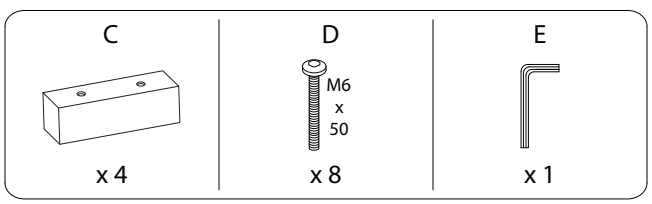

2/4

2117/RENDERS/050825/

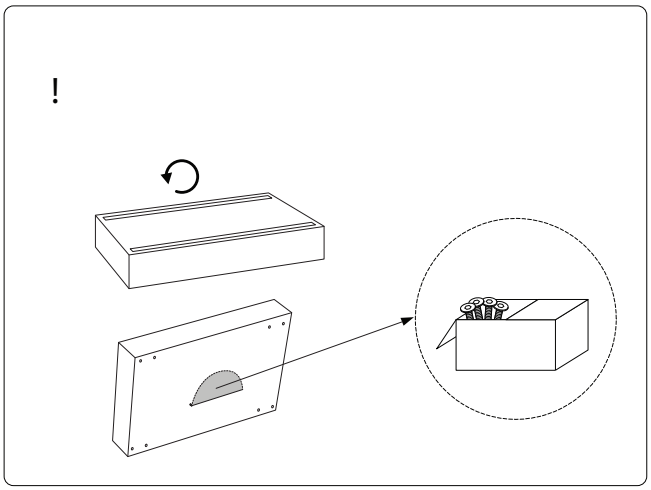

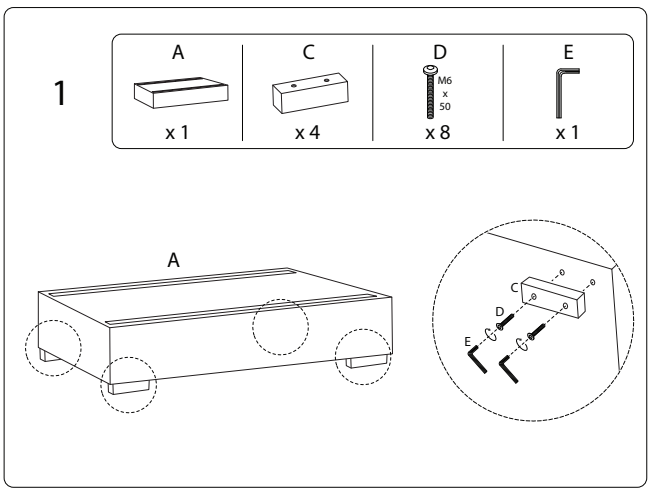

3/4

2117/RENDERS/050825/

2

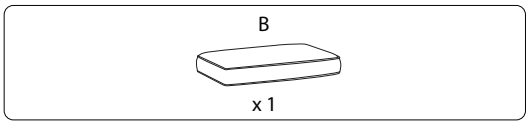

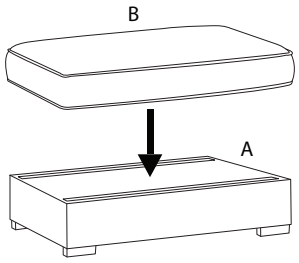

!

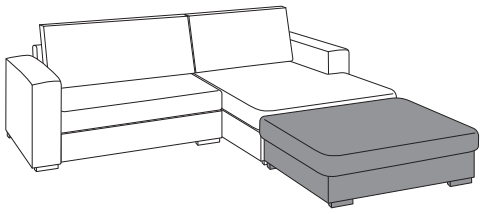

2117/RENDERS/050825/