TARUMIR

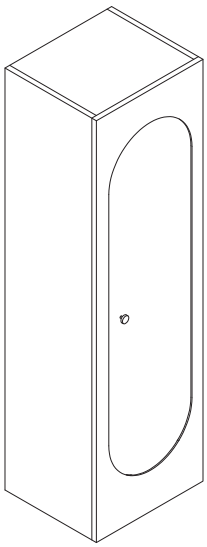

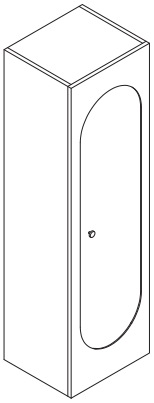

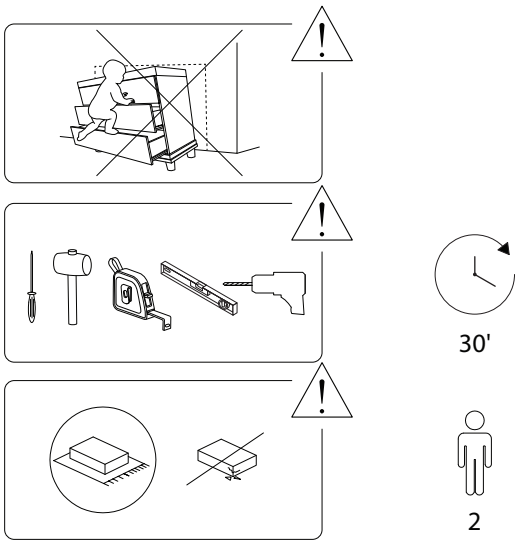

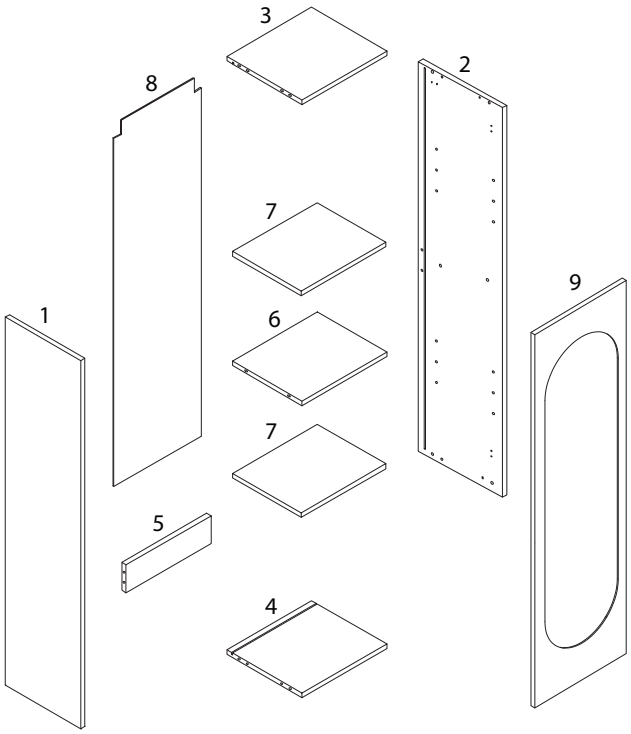

1	2
	
x 1	x 1

3	4	5	6
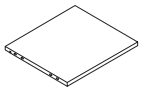	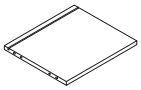		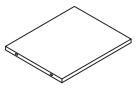
x 1	x 1	x 1	x 1
7	**8**	**9**	**A**
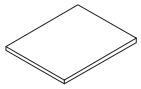			
x 2	x 1	x 1	x 16
B	**C**	**D**	**E**
			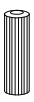
x 16	x 16	x 12	x 8
F	**G1**	**G2**	**G3**
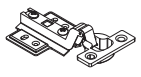	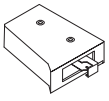	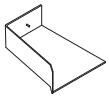	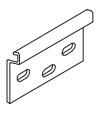
x 2	x 2	x 2	x 2

H	J	K	L	M1	M2
					
ST4 x 30			ST5 x 50		M4 x 35
x 4	x 8	x 6	x 6	x 1	x 1

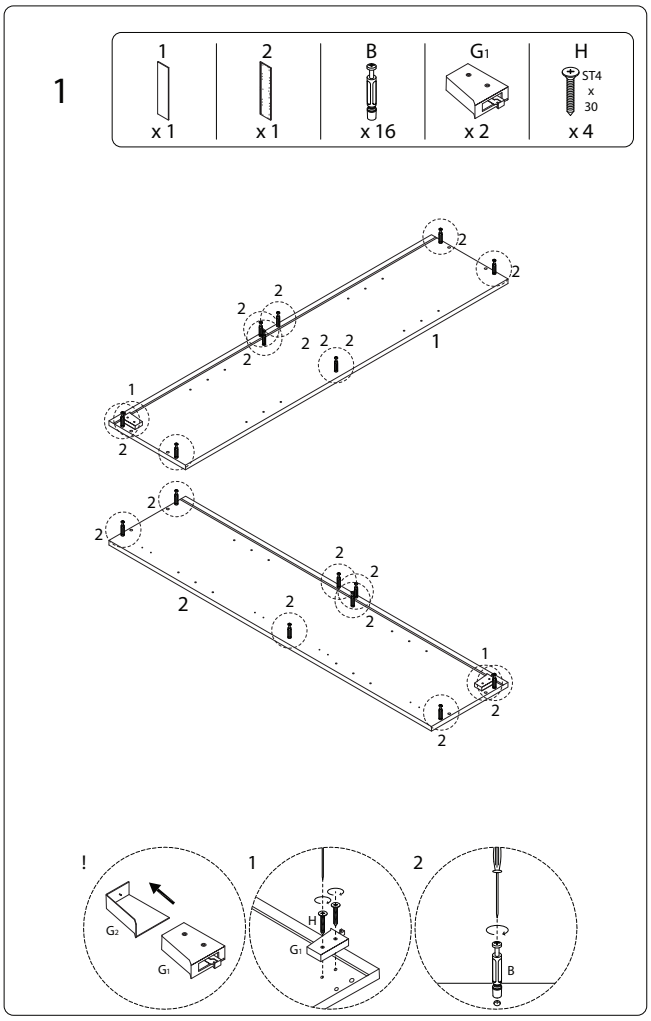
1
1
x 1
2
x 1
B
x 16
G1
x 2
H
ST4
x
30
x 4
!
G2
G1
1
H
G1
2
B

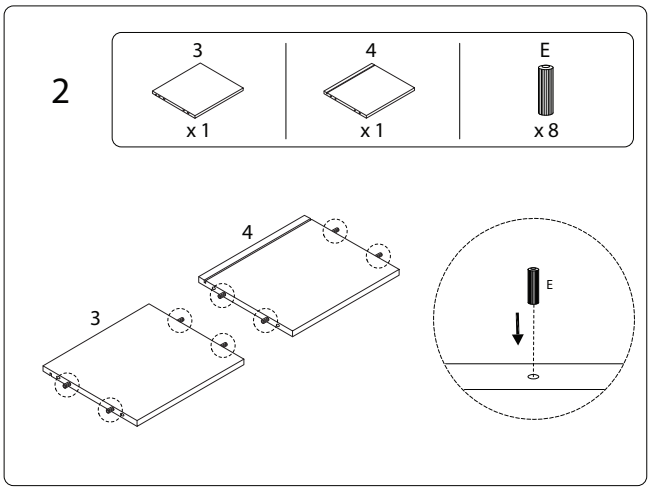
2
3
x 1
4
x 1
E
x 8
4
3
E

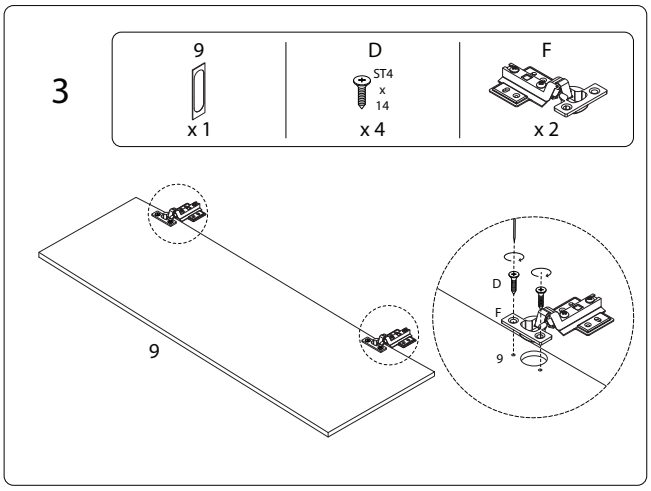
3
9
x 1
D
ST4
x
14
x 4
F
x 2
9
D
F
9

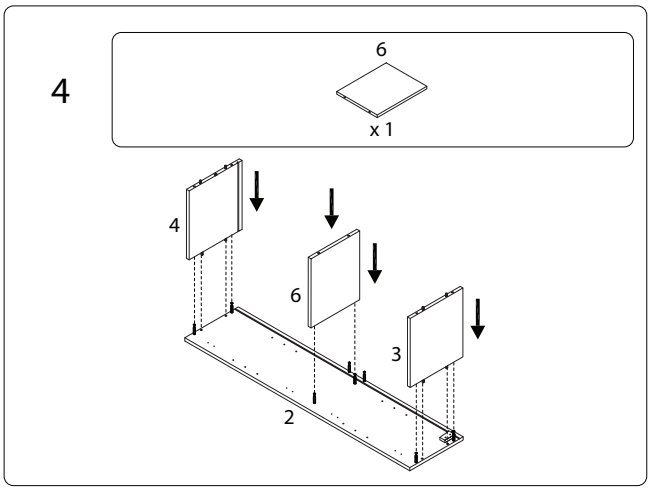
4
6
x 1
4
6
3
2

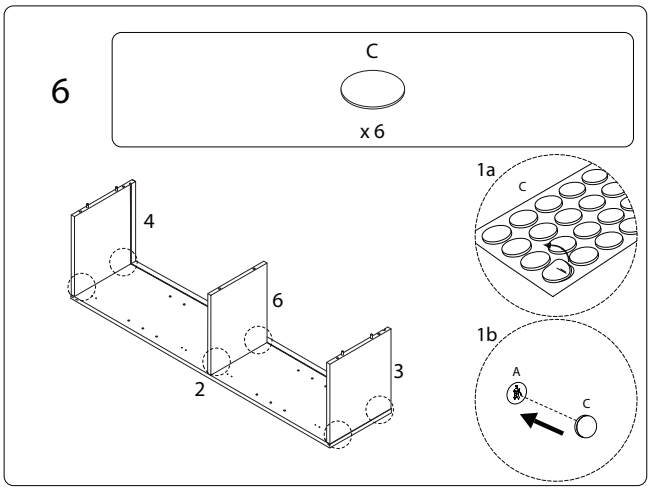
6
C
x 6
4
6
3
2
1a
C
1b
A
C

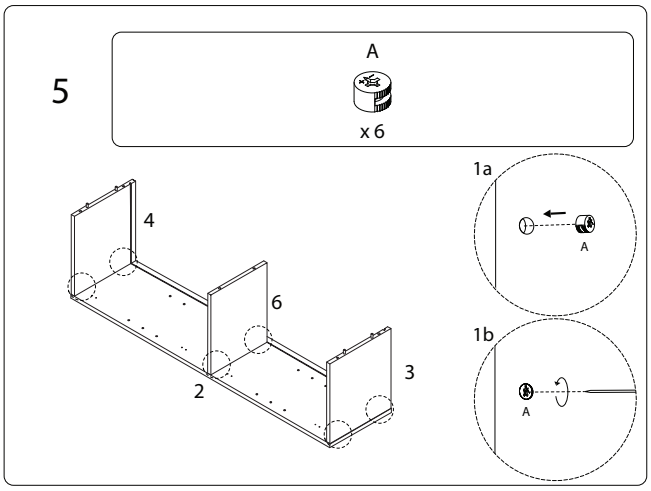
5
A
x 6
4
6
3
2
1a
A
1b
A

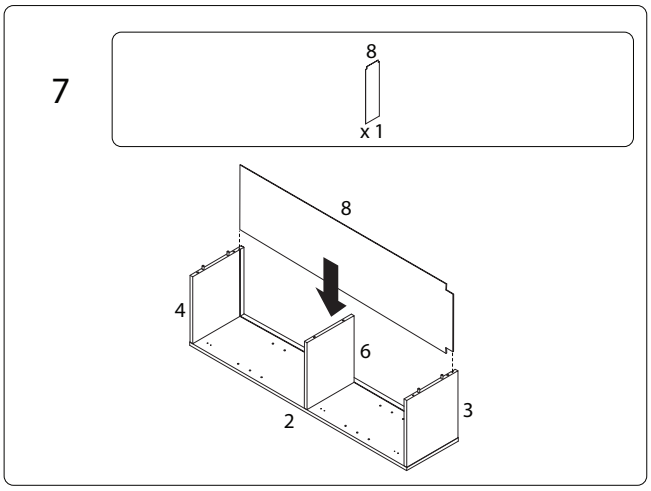
7
8
x 1
8
4
6
3
2

8

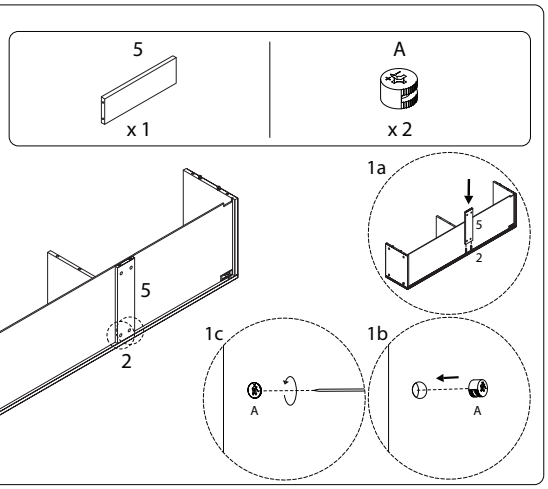
5
x 1
A
x 2
1a
5
2
5
2
1c
A
1b
A

9

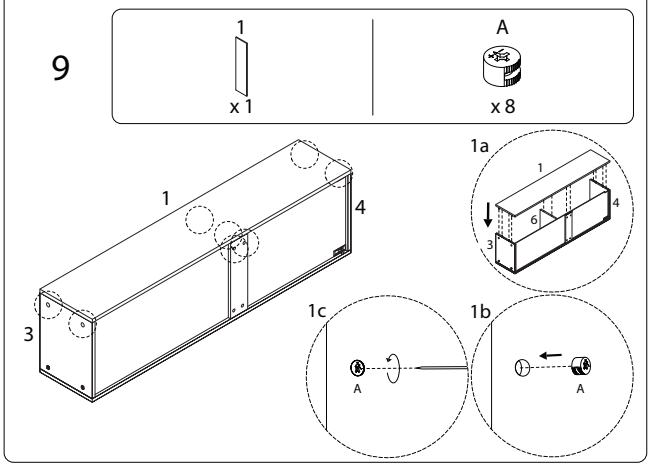
1
x 1
A
x 8
1a
1
6
4
3
1
4
3
1c
A
1b
A

10

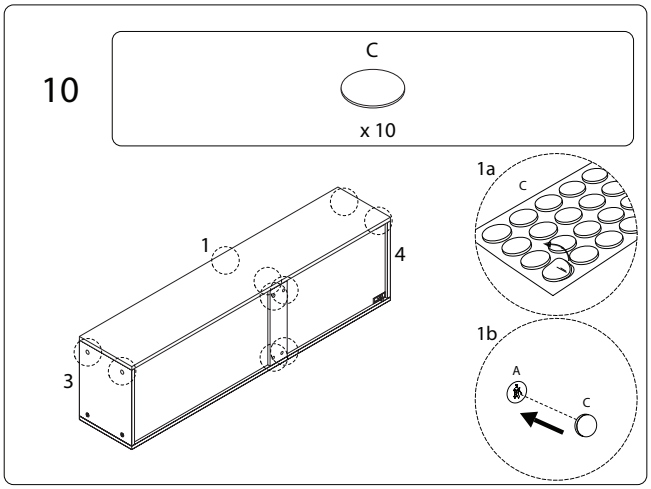
C
x 10
1
4
3
1a
C
1b
A
C

11

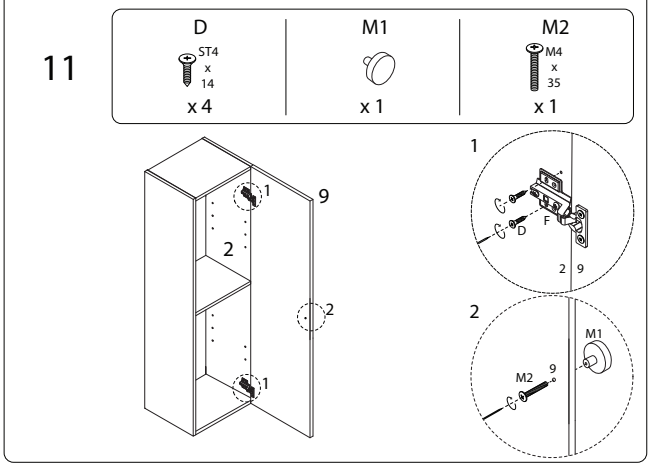
D
ST4
x
14
x 4
M1
x 1
M2
M4
x
35
x 1
1
9
2
2
1
1
D
F
2 9
2
M1
M2
9

!

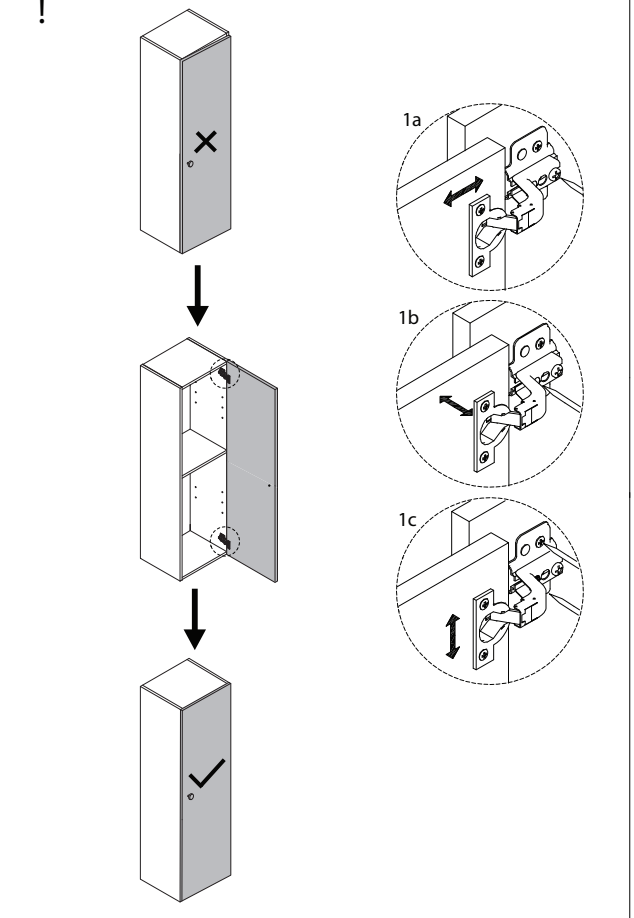
1a
1b
1c

12

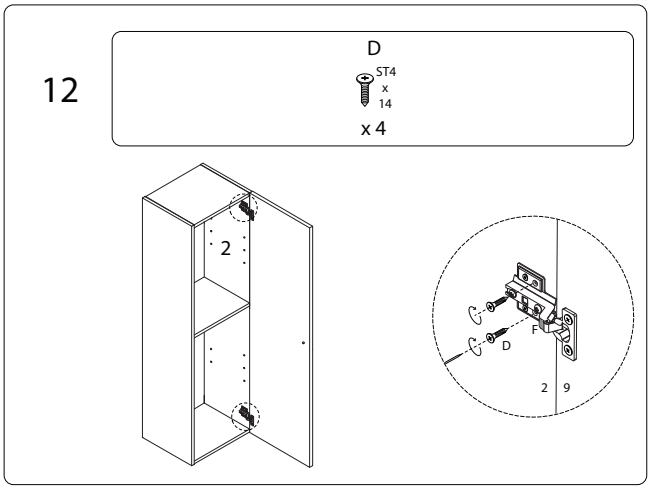
D
ST4
x
14
x 4
2
D
F
2 9

13

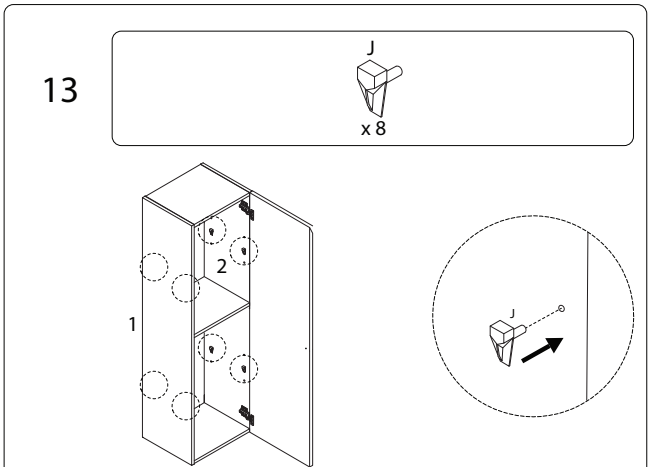
J
x 8
2
1
J

14

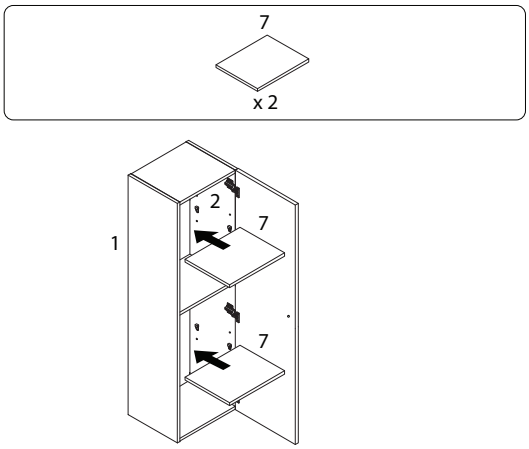

16

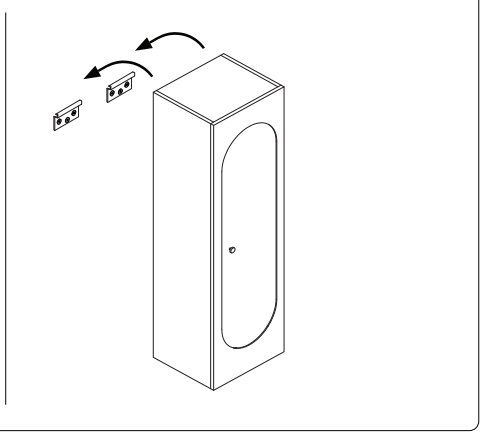

15

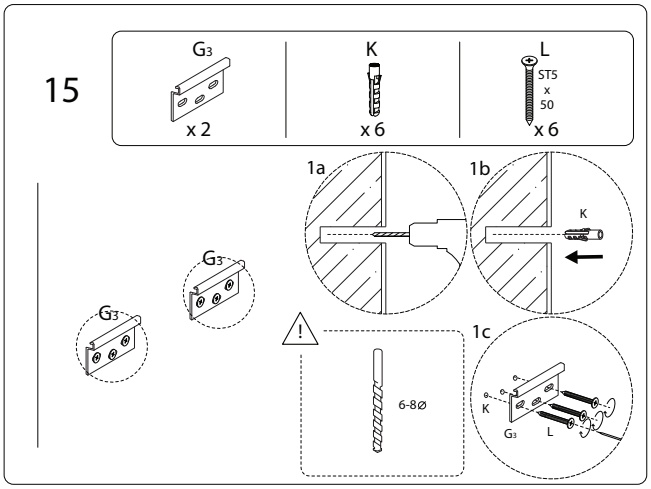

17

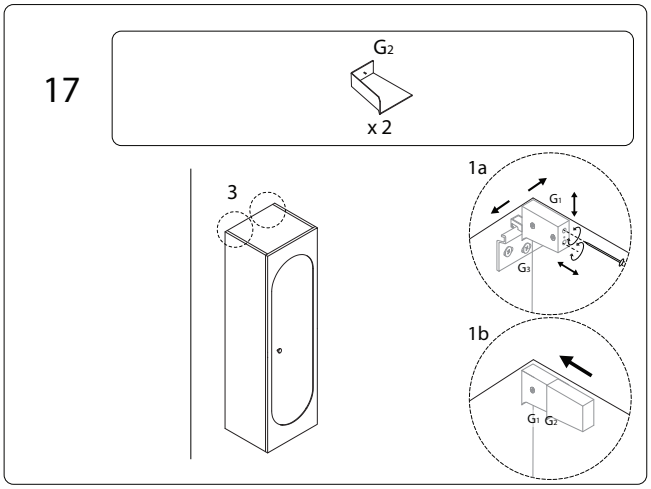

2354/TARUMIR/160926

2354/TARUMIR/160926