LEDUC

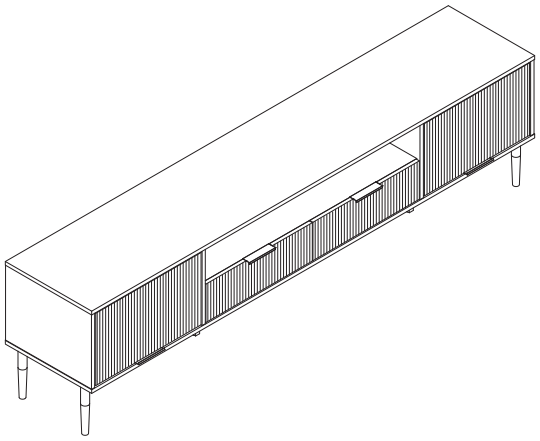

1/19

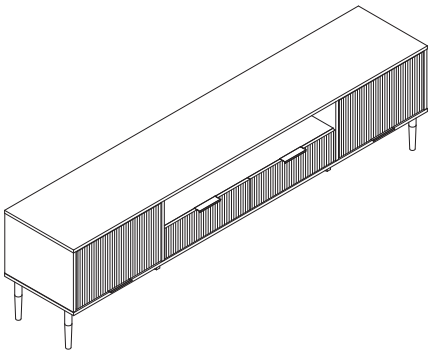

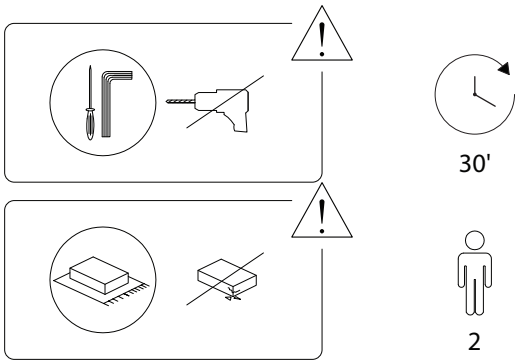

2/19

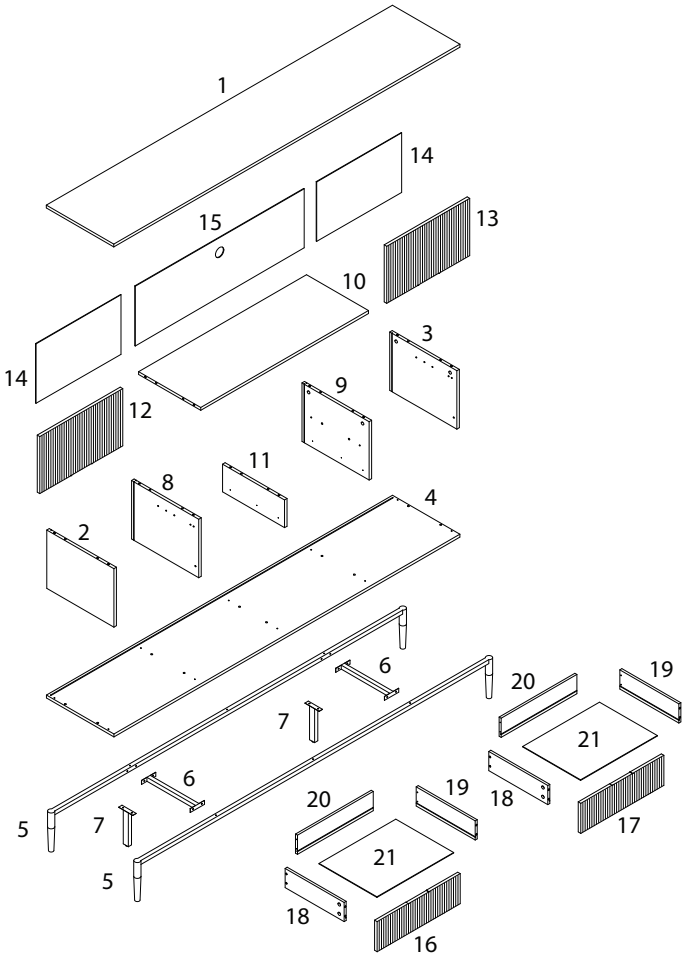

3/19

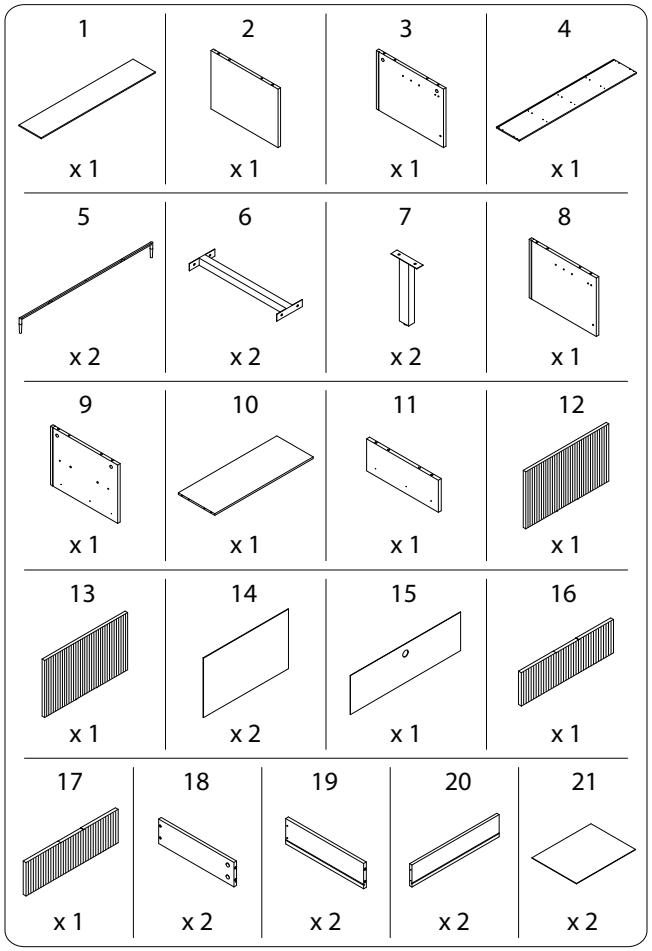

4/19

2619/LEDUC/150126/

A	B	C	CL
			
x 22	x 22	x 24	x 2

CR	DL	DR	D
		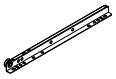	 M4 x 35
x 2	x 2	x 2	x 18

E	F	G	H1
 M6 x 12	 M6 x 30		
x 12	x 6	x 1	x 4

H2	I1	I2	J
 M3 x 12		 M3 x 14	 M3.5 x 12
x 8	x 12	x 12	x 20

K1	K2	L1	L2	M
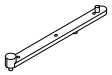	 M3 x 14		 M3 x 12	
x 4	x 12	x 4	x 8	x 4

1

8	9	11	CL	CR	J
x 1	x 1	x 1	x 2	x 2	M3.5 x 12 x 12

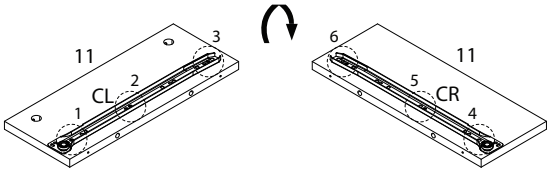

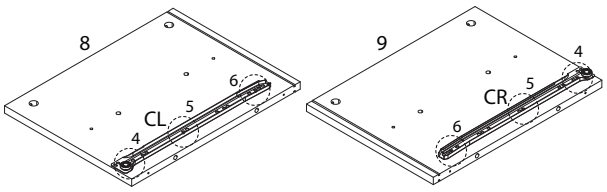

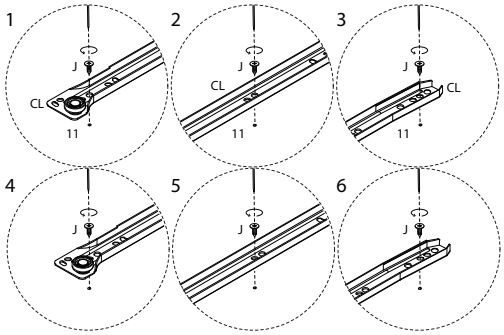

2

2	3	A	C
x 1	x 1	x 4	x 12

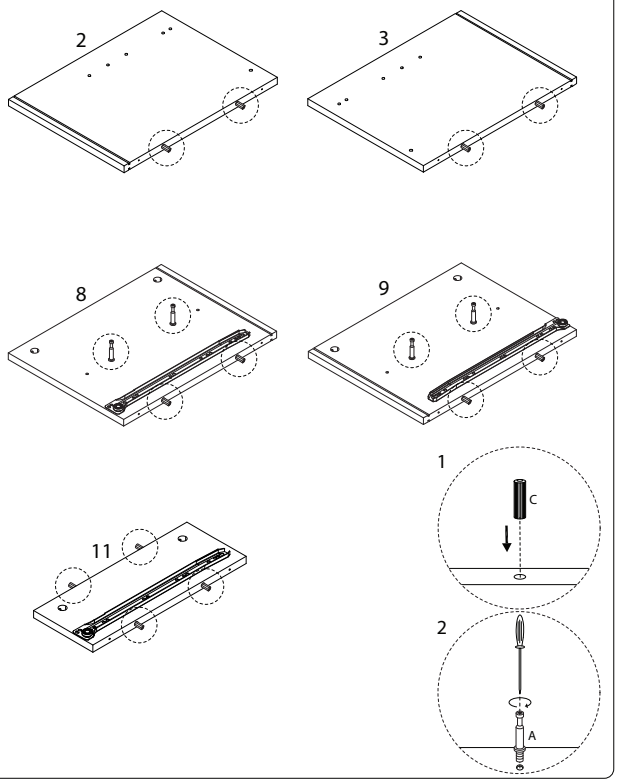

3

K1	K2
x 2	M3 x 14 x 6

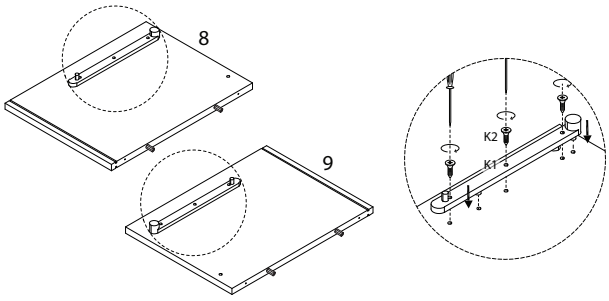

4

K1	K2
x 2	M3 x 14 x 6

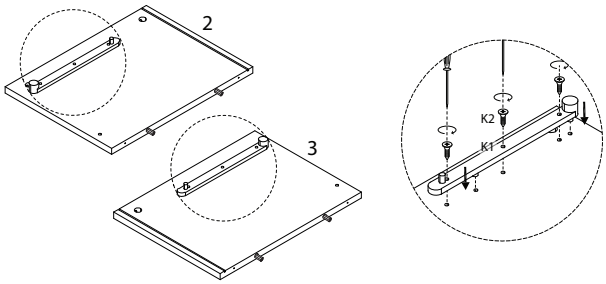

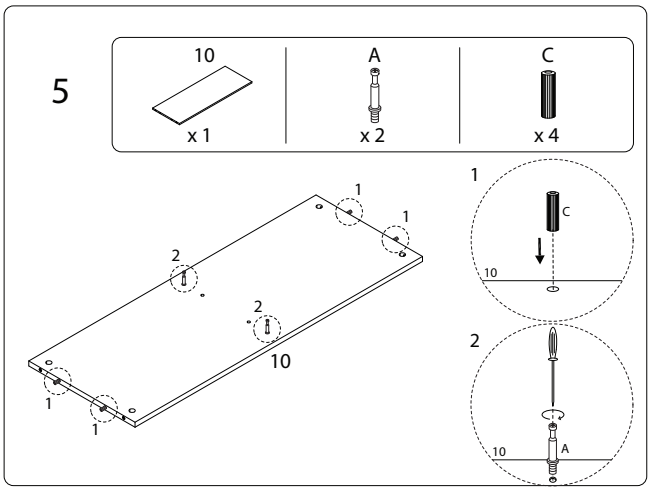

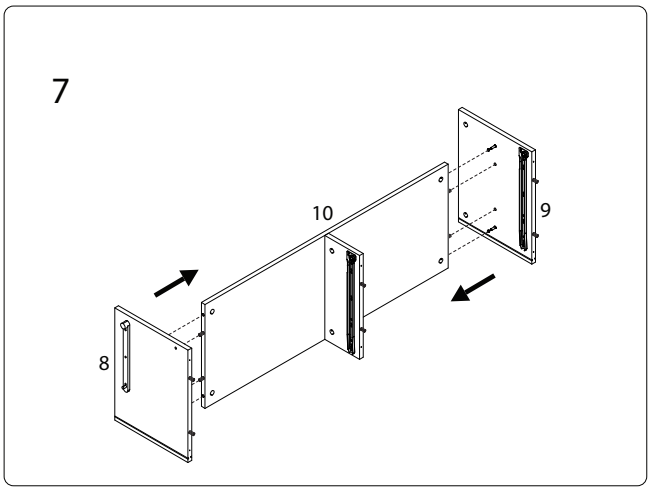

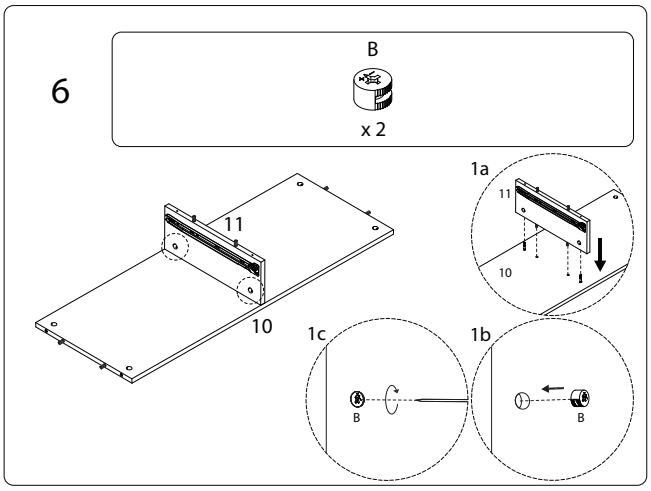

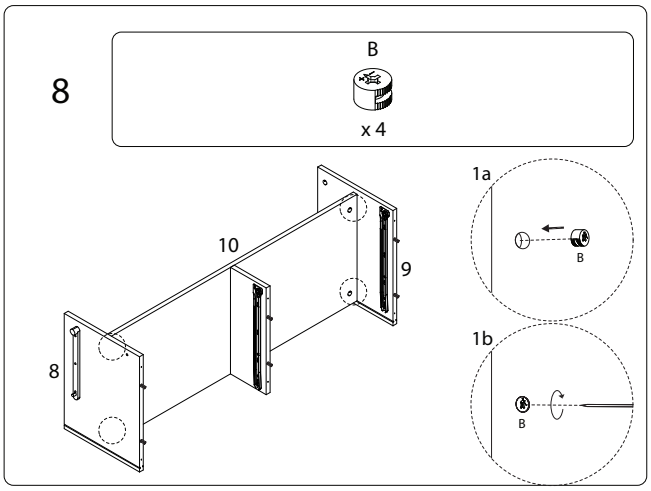

2619/LEDUC/150126/

2619/LEDUC/150126/

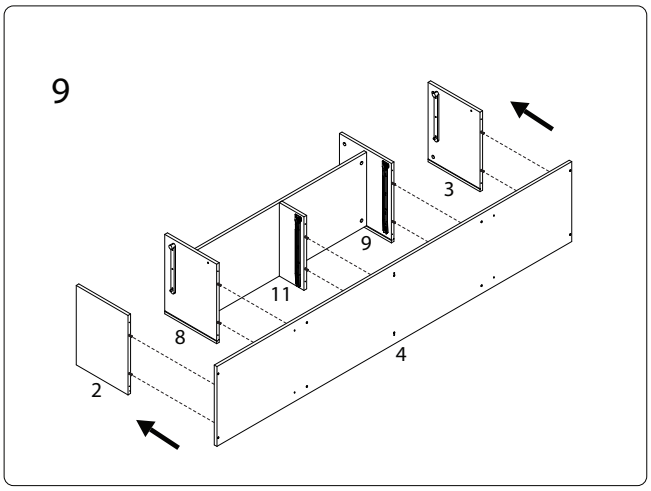

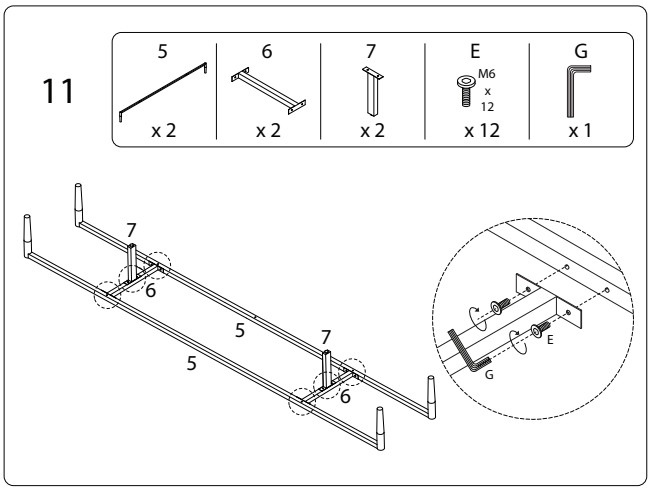

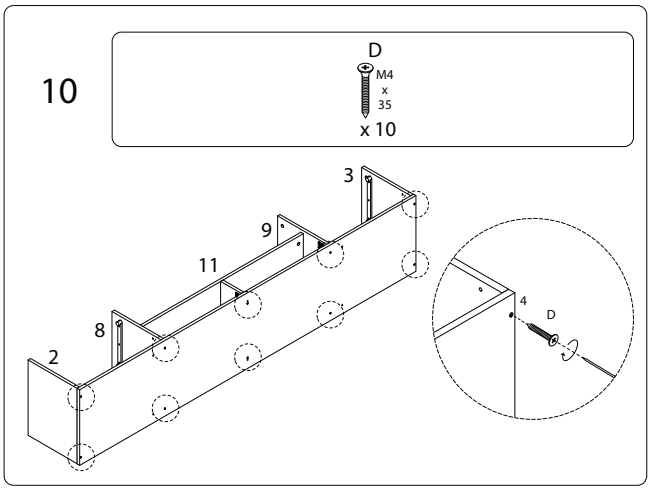

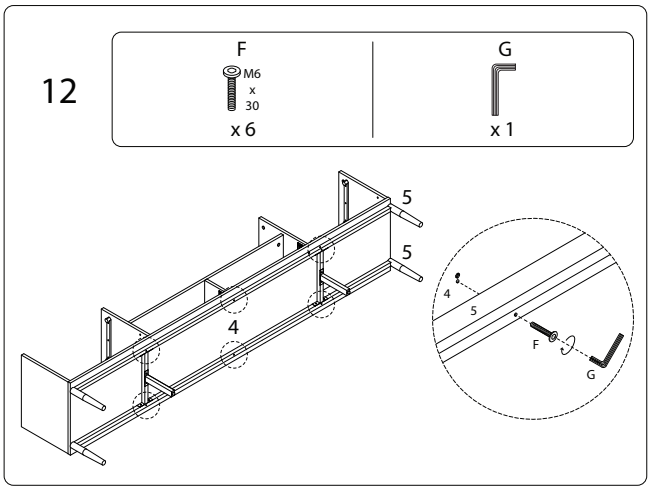

2619/LEDUC/150126/

2619/LEDUC/150126/

13

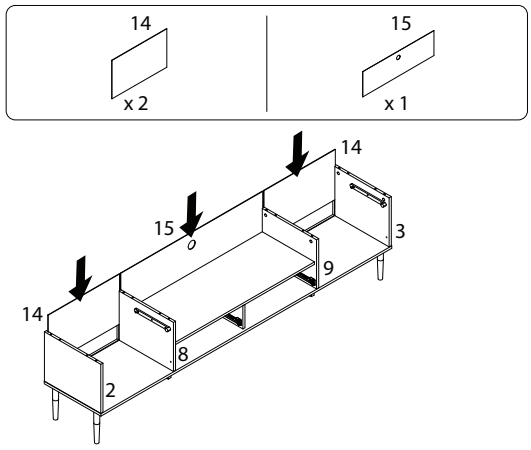

15

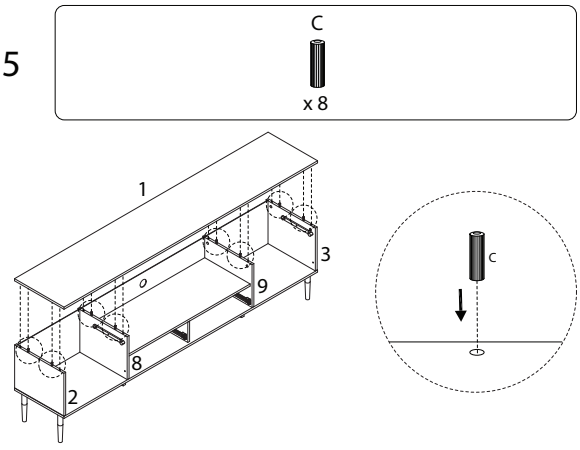

14

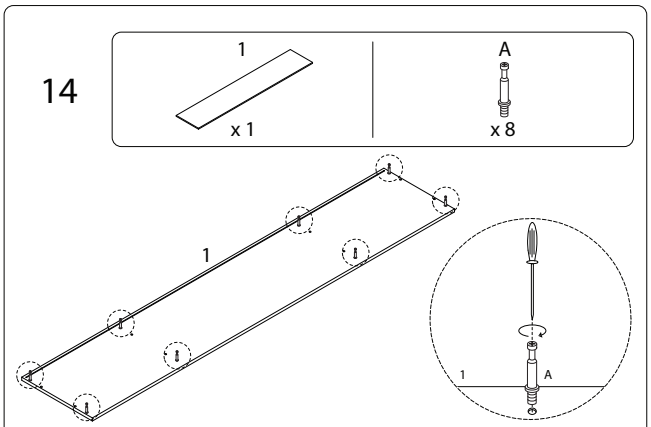

16

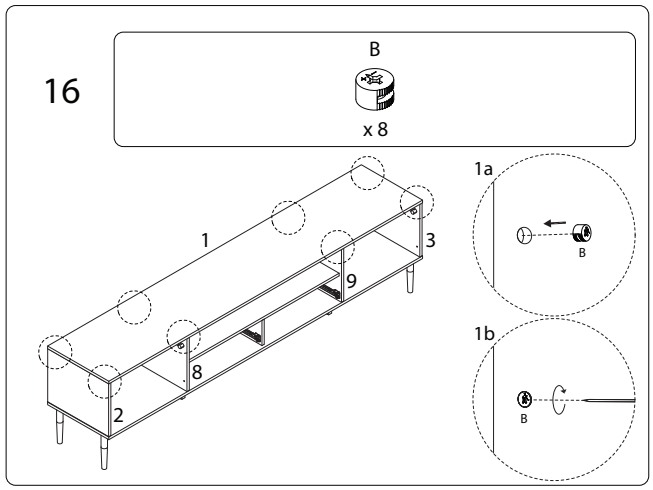

17

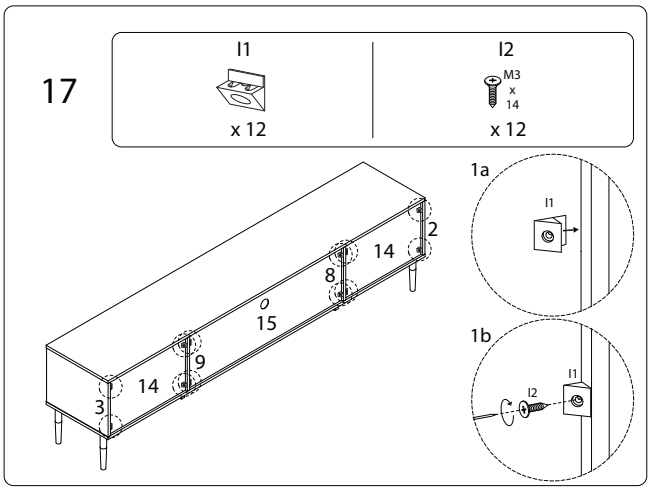

19

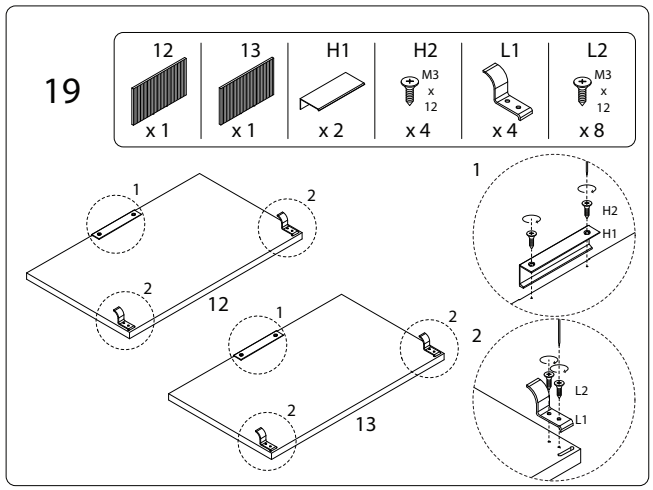

18

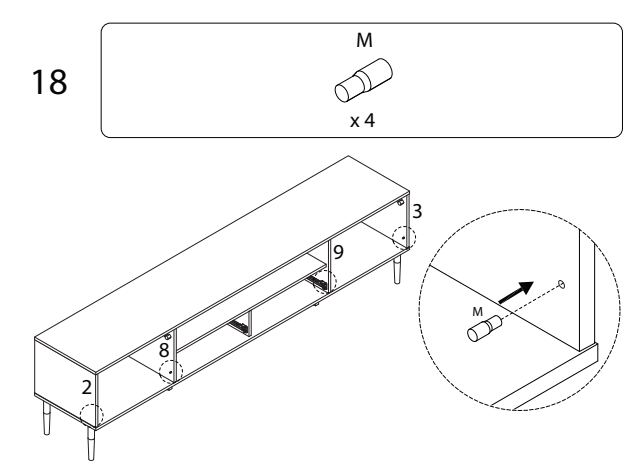

20

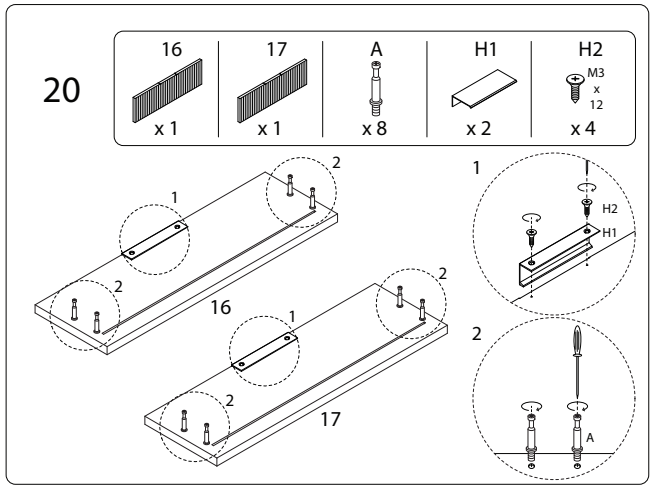

21 x 2

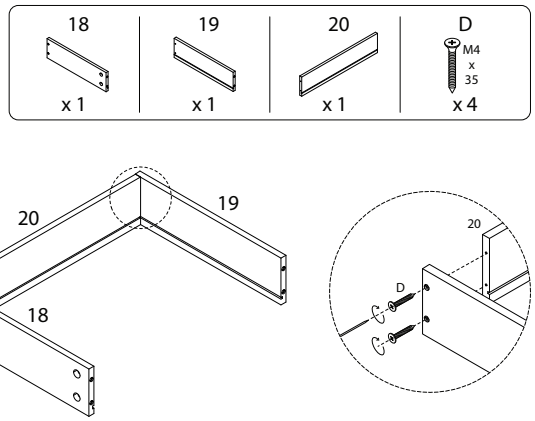

22 x 2

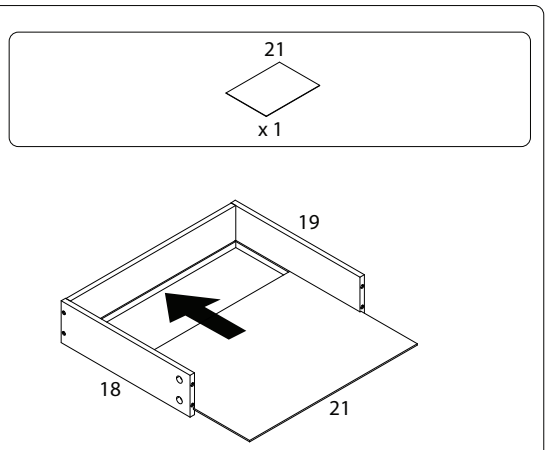

23

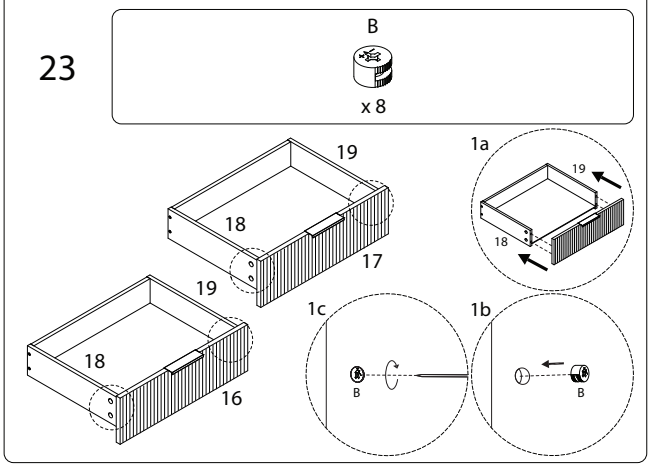

24

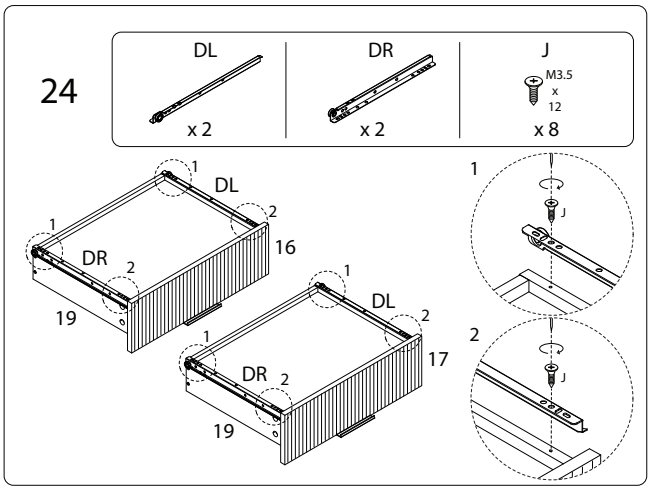

25

