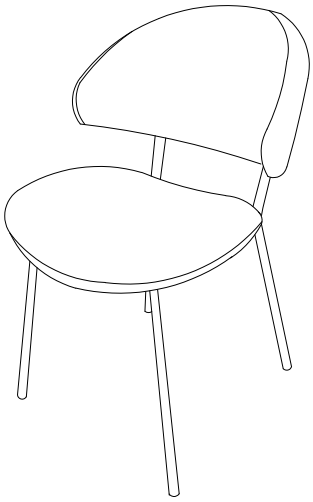

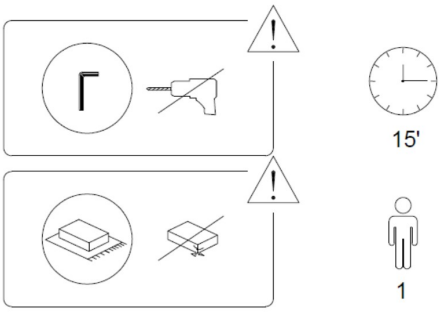

1/3

A	B	C
X1	X1	X1

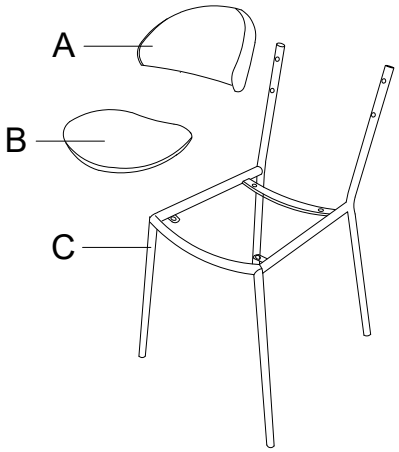

D	E	F
M6 x 35	M6 x 16	M6 x 25
X4	X2	X2
G	H	
X4	X1	

2/3

①

B	C	E	F	G	H
		M6 x 16	M6 x 25		
X1	X1	X2	X2	X4	X1

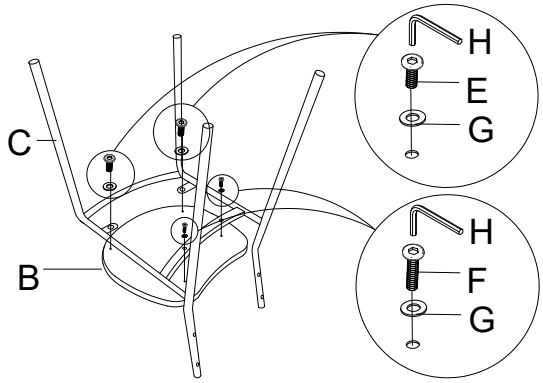

②

A	D	H
	M6 x 35	
X1	X4	X1

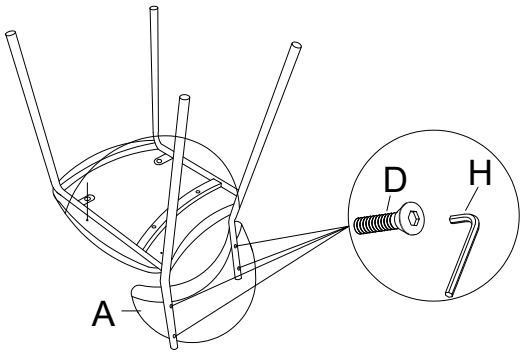

3/3