JASMIN

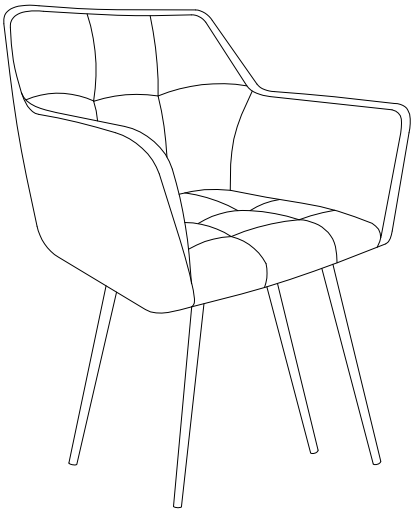

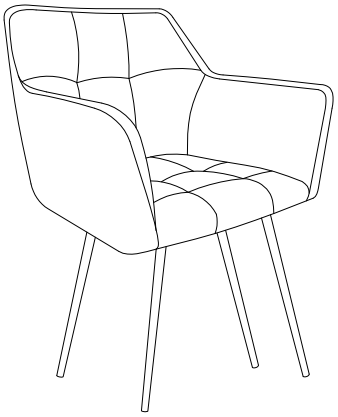

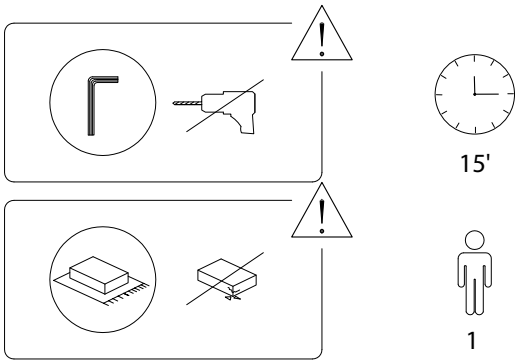

1/4

499/JASMIN/180924/

A	B	C
x 1	x 1	x 1

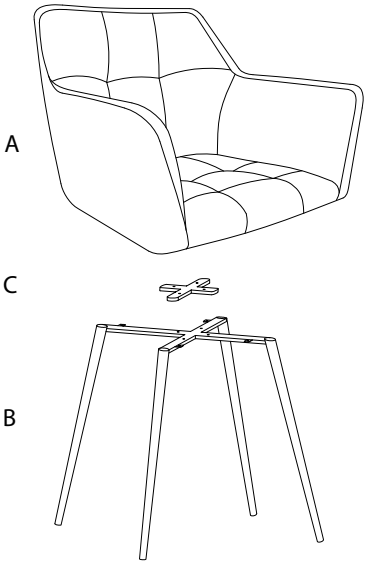

D	E	F
M6 x 16		M5
x 8	x 8	x 1

2/4

499/JASMIN/180924/

1

A	B	D	E	F
		M6 x 16		
x 1	x 1	x 4	x 4	x 1

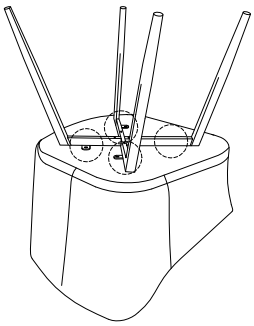

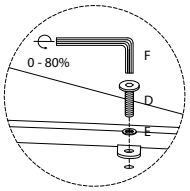

2

C	D	E	F
	M6 x 16		
x 1	x 4	x 4	x 1

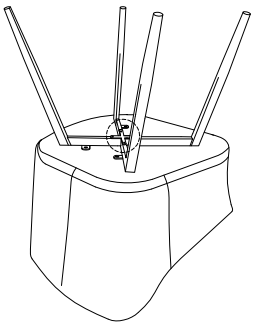

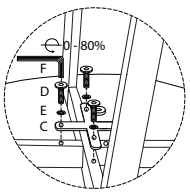

3/4

499/JASMIN/180924/

3

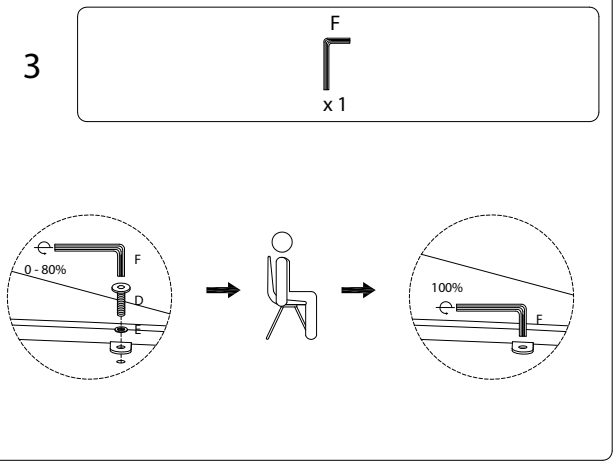

499/JASMIN/180924/