MOURA

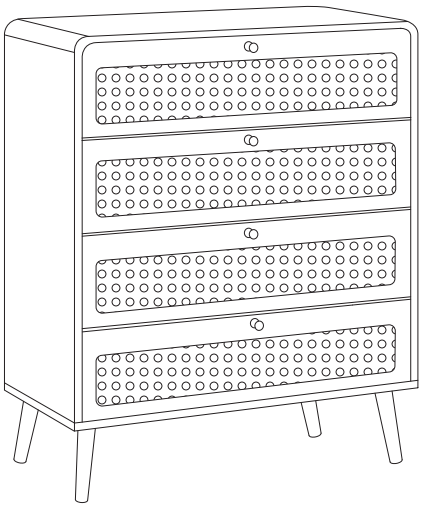

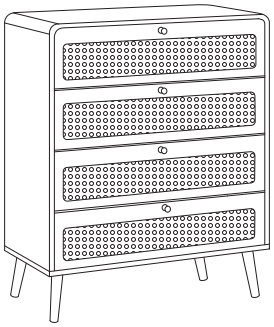

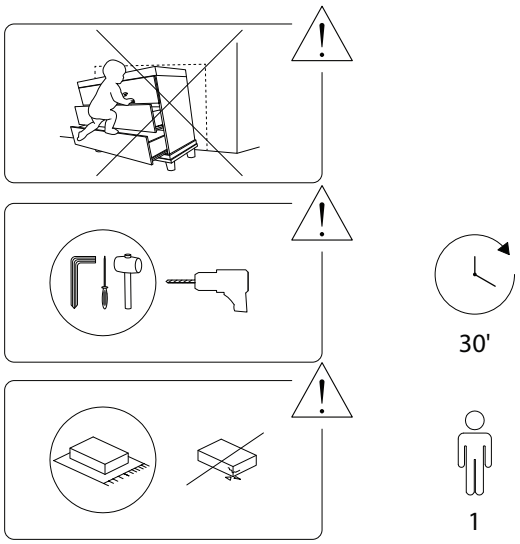
30'
1

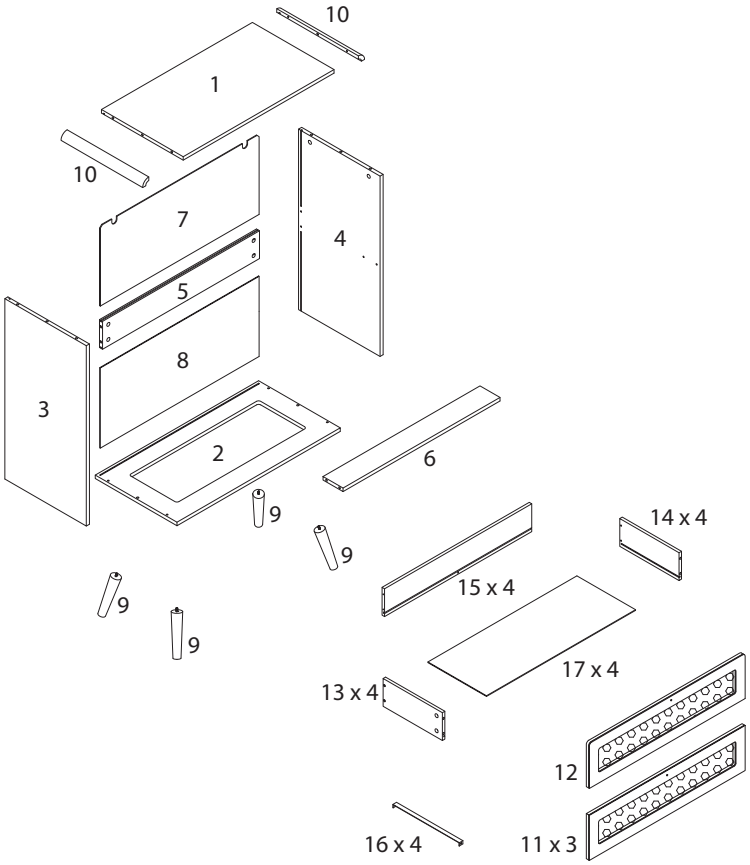
10
1
10
7
4
5
8
3
2
6
9
9
9
9
14 x 4
15 x 4
17 x 4
13 x 4
12
16 x 4
11 x 3

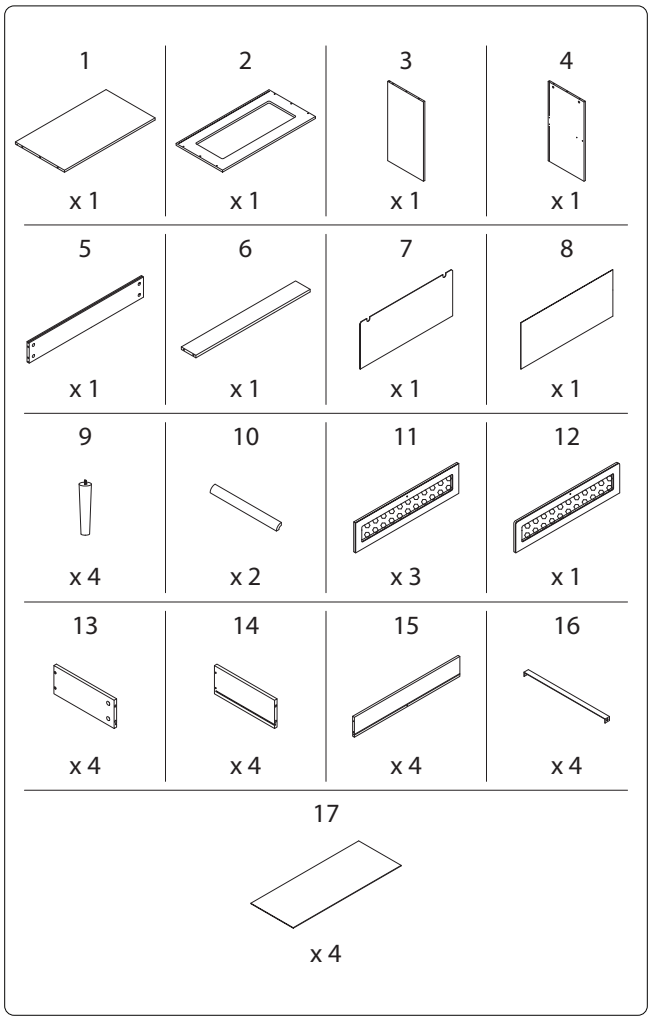
1
x 1
2
x 1
3
x 1
4
x 1
5
x 1
6
x 1
7
x 1
8
x 1
9
x 4
10
x 2
11
x 3
12
x 1
13
x 4
14
x 4
15
x 4
16
x 4
17
x 4

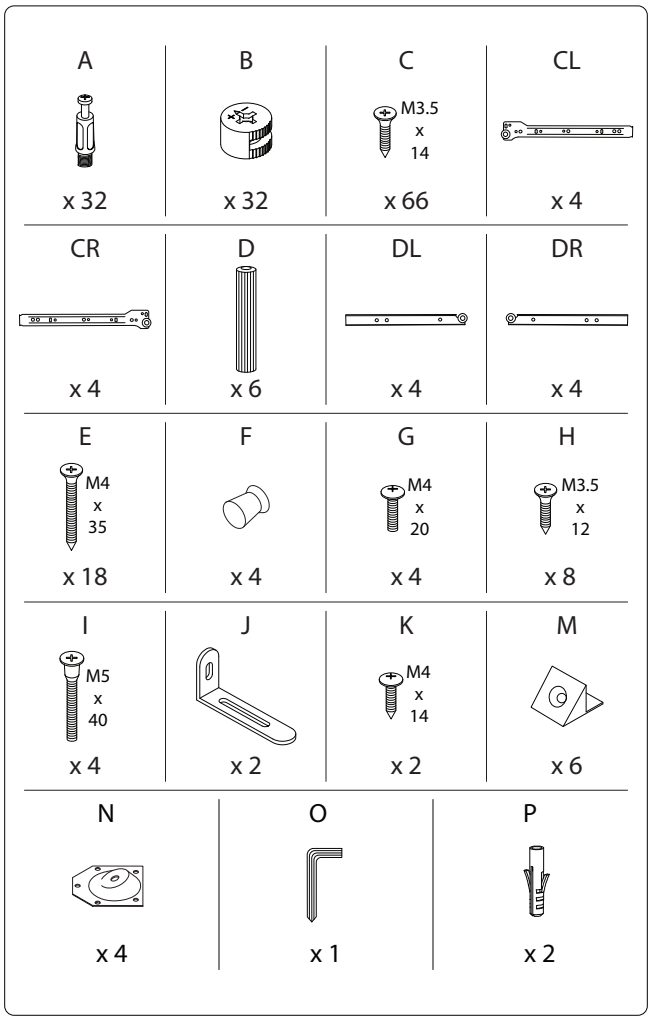
A
x 32
B
x 32
C
M3.5 x 14
x 66
CL
x 4
CR
x 4
D
x 6
DL
x 4
DR
x 4
E
M4 x 35
x 18
F
x 4
G
M4 x 20
x 4
H
M3.5 x 12
x 8
I
M5 x 40
x 4
J
x 2
K
M4 x 14
x 2
M
x 6
N
x 4
O
x 1
P
x 2

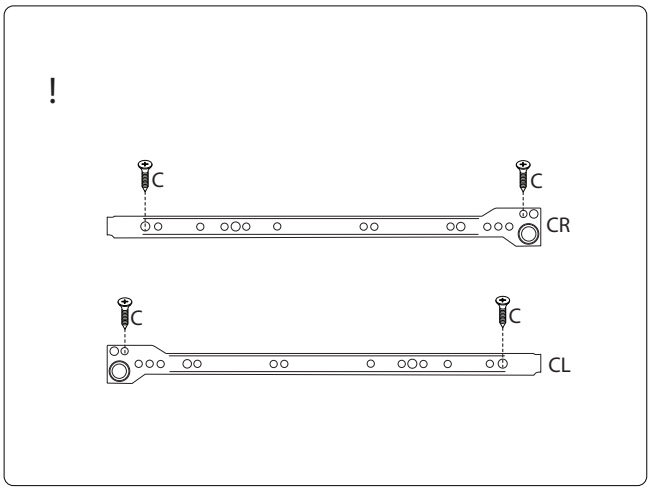
!
C
C
CR
C
C
CL

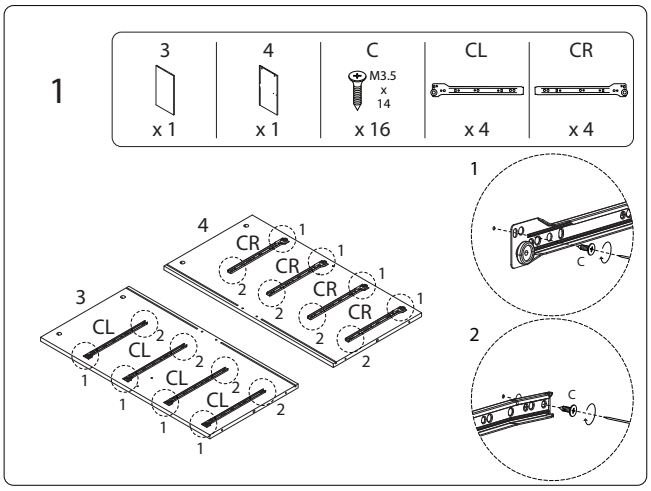
1
3
x 1
4
x 1
C
M3.5 x 14
x 16
CL
x 4
CR
x 4
4
CR
CR
CR
CR
3
CL
CL
CL
CL
1
2
C
C

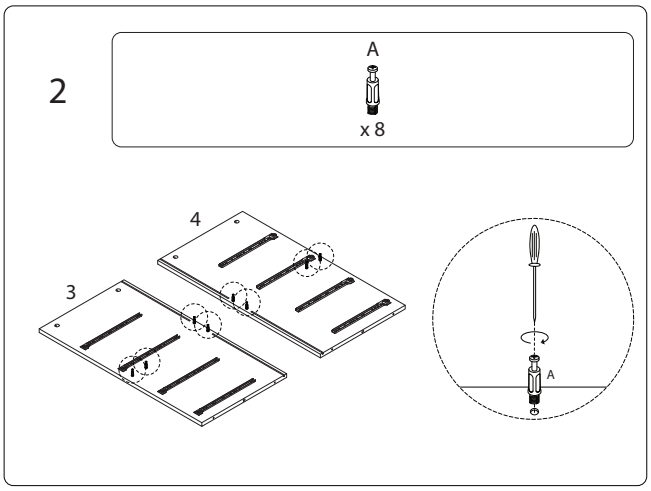
2
A
x 8
4
3
A

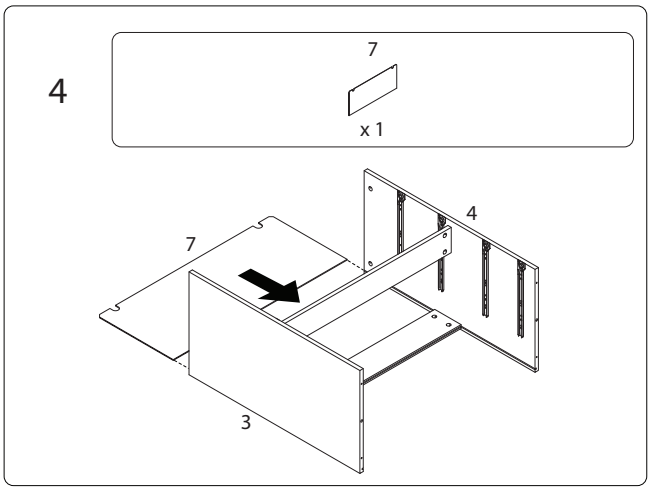
4
7
x 1
7
4
3

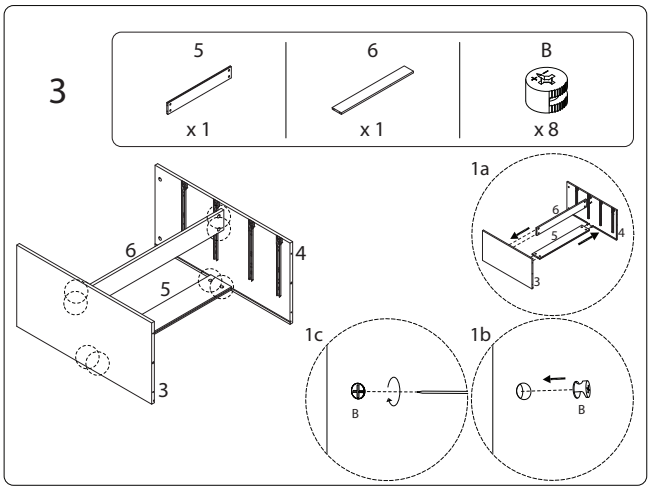
3
5
x 1
6
x 1
B
x 8
6
4
5
3
1a
6
5
4
3
1c
B
1b
B

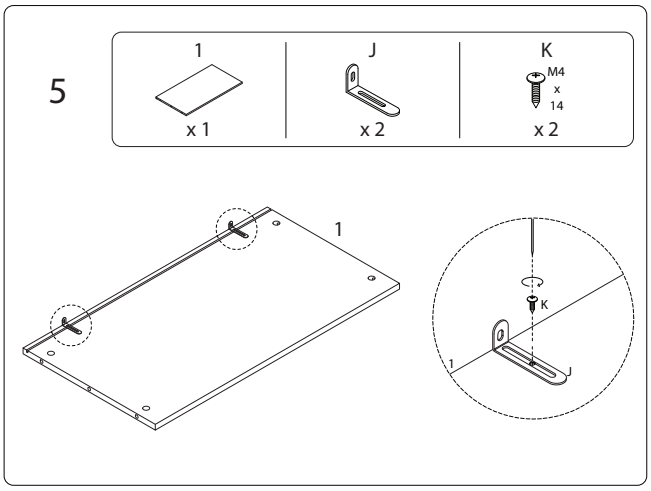
5
1
x 1
J
x 2
K
M4 x 14
x 2
1
K
1
J

6 x 2

10	A	D
x 1	x 4	x 2

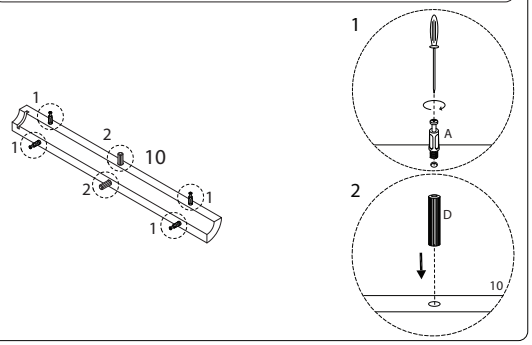

8

B
x 4

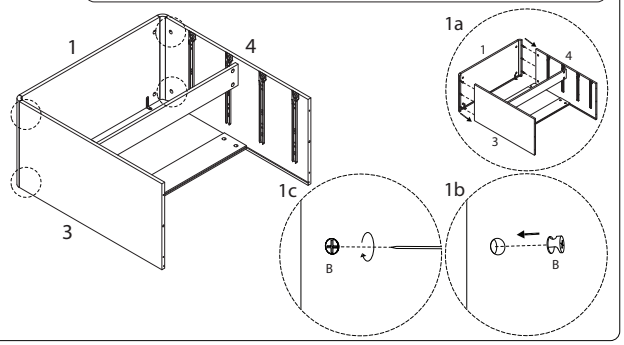

7

B
x 4

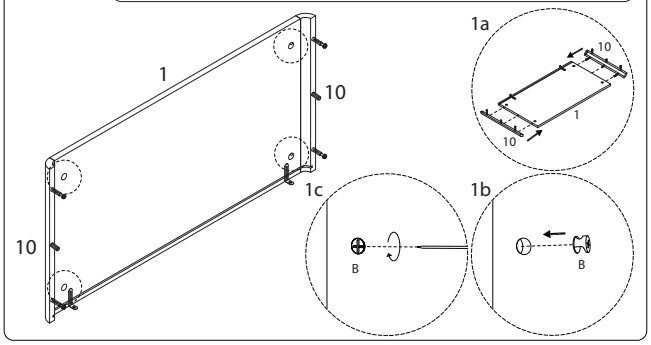

9

8
x 1

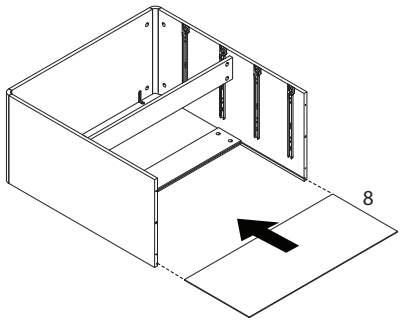

10

2	D
x 1	x 2

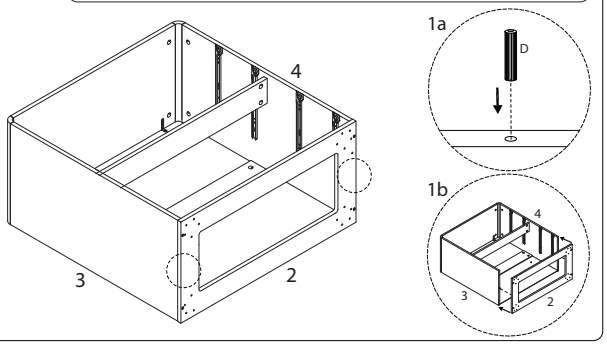

12

C	N	O
M3.5 x 14		
x 20	x 4	x 1

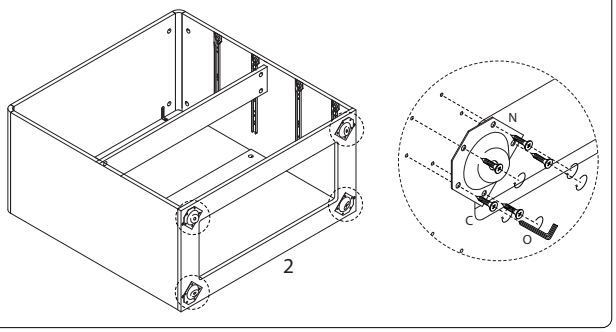

11

I	O
M5 x 40	
x 4	x 1

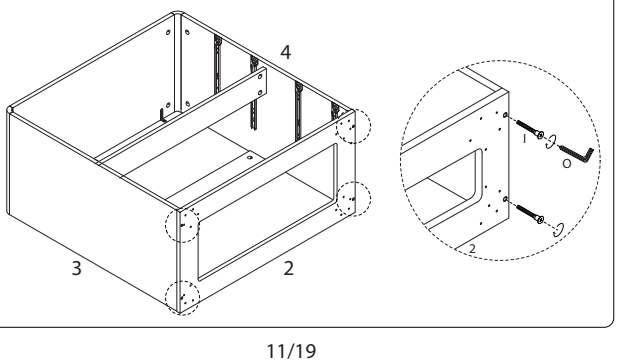

13

9
x 4

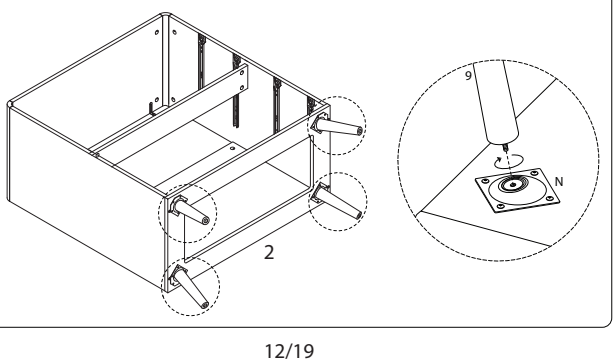

14

C	M
M3.5 x 14	
x 6	x 6

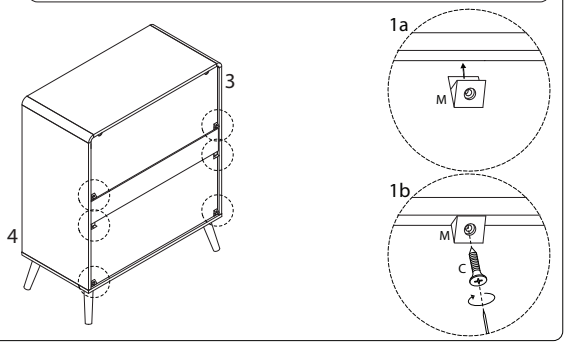

15

E	P
M4 x 35	
x 2	x 2

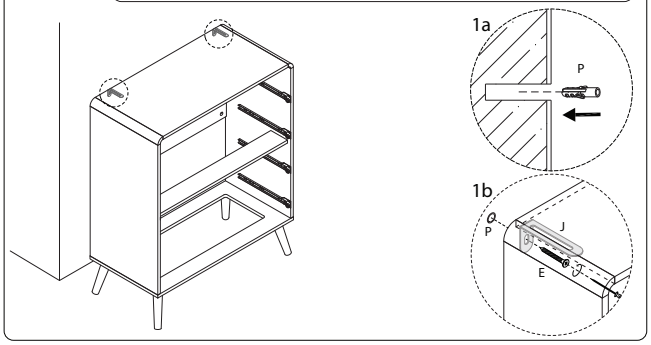

16 x 4

13	14	15	E
			M4 x 35
x 1	x 1	x 1	x 4

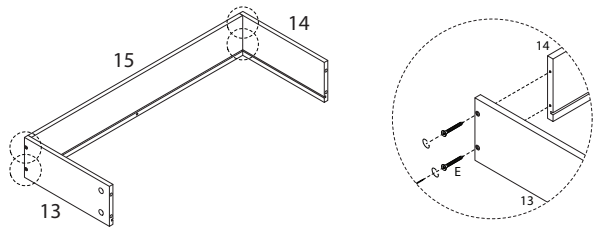

17 x 4

17
x 1

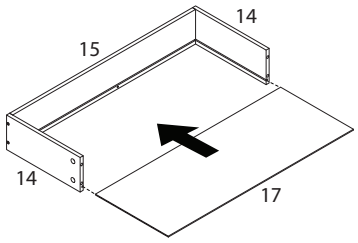

18

12	A	F	G	O
			M4 x 20	
x 1	x 4	x 1	x 1	x 1

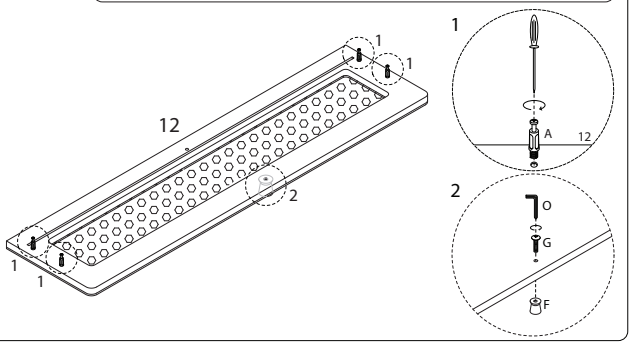

19 x 3

11	A	F	G	O
			M4 x 20	
x 1	x 4	x 1	x 1	x 1

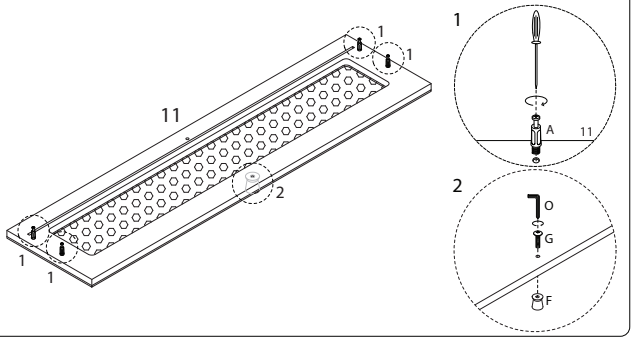

20

B
x 4

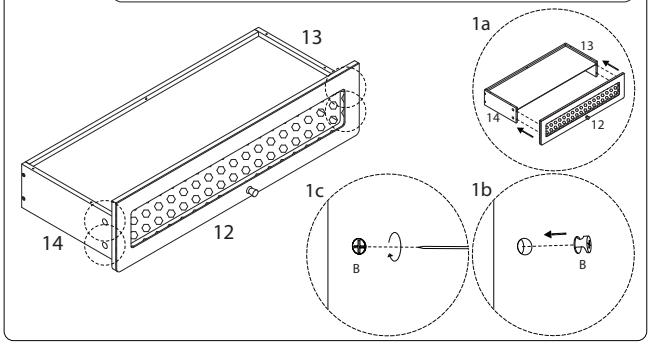

21 x 3

B
x 4

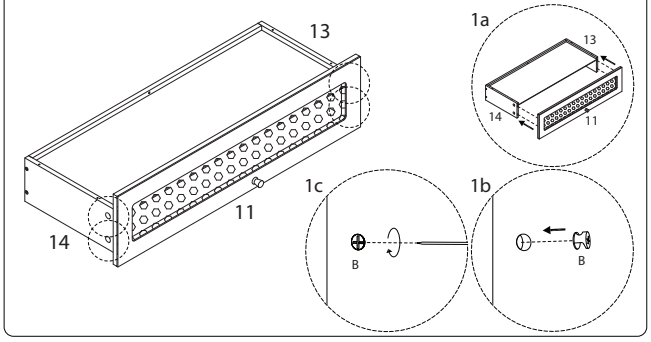

!

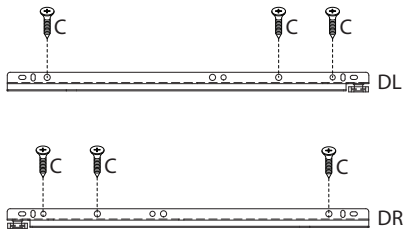

23 x 3

C	DL	DR
M3.5 x 14		
x 6	x 1	x 1

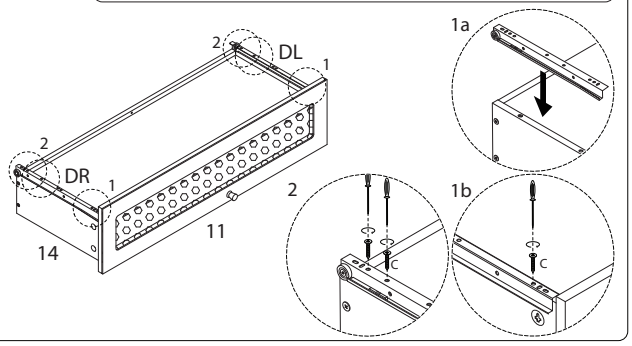

22

C	DL	DR
M3.5 x 14		
x 6	x 1	x 1

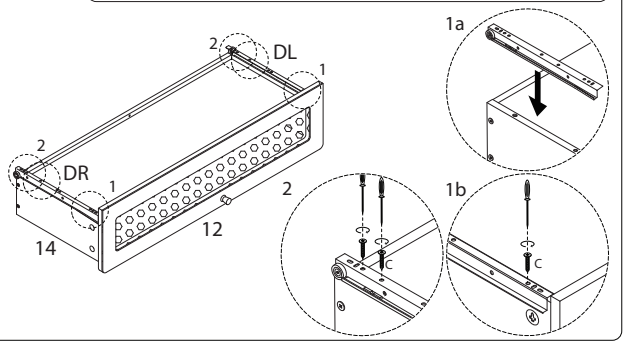

24

16	H
	M3.5 x 12
x 1	x 2

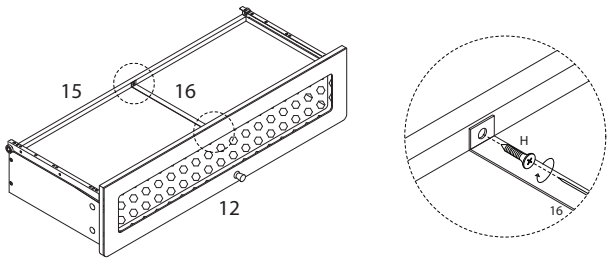

25 x 3

16	H
	M3.5 x 12
x 1	x 2

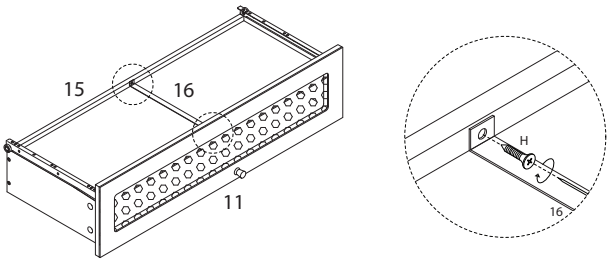
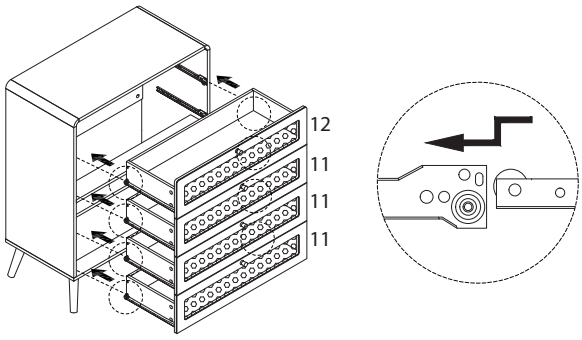
26