MERI II

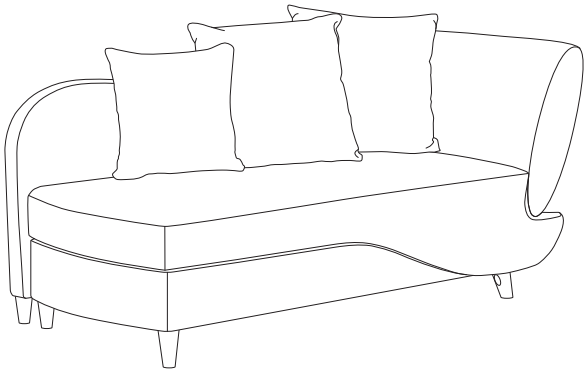

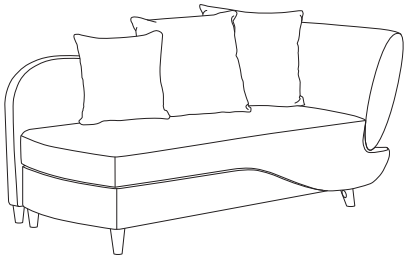

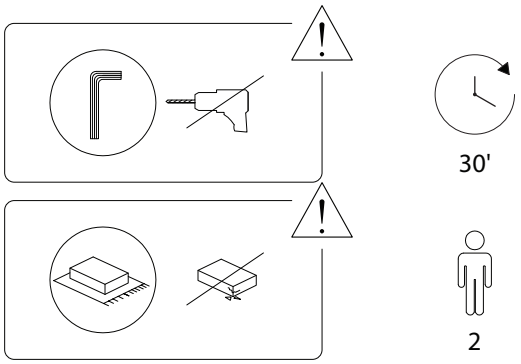
30'
2

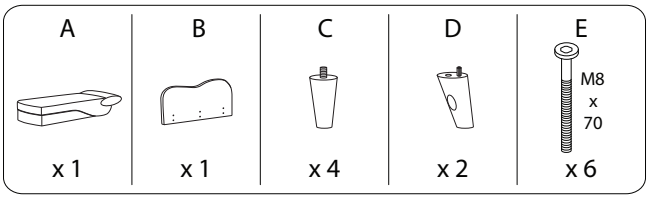
A
x 1
B
x 1
C
x 4
D
x 2
E
M8
x
70
x 6

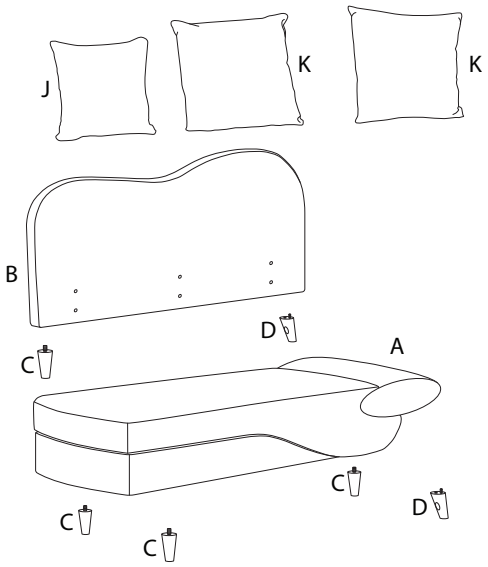
J
K
K
B
D
C
A
C
D
C
C

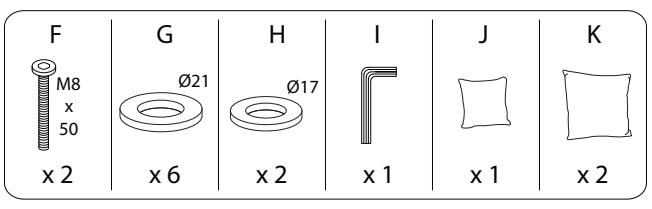
F
M8
x
50
x 2
G
Ø21
x 6
H
Ø17
x 2
I
x 1
J
x 1
K
x 2

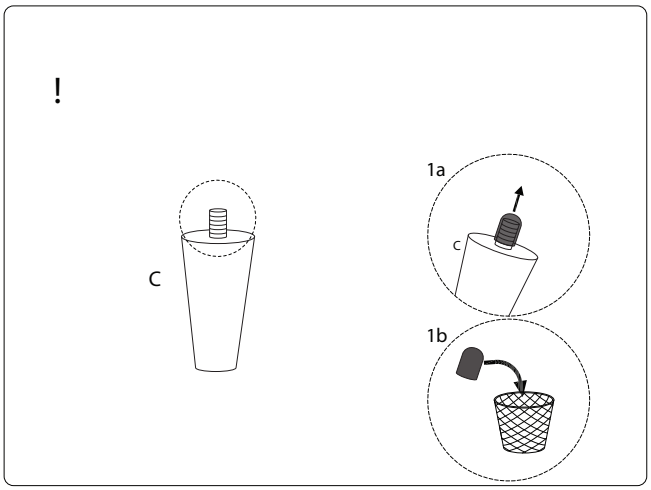
!
C
1a
C
1b

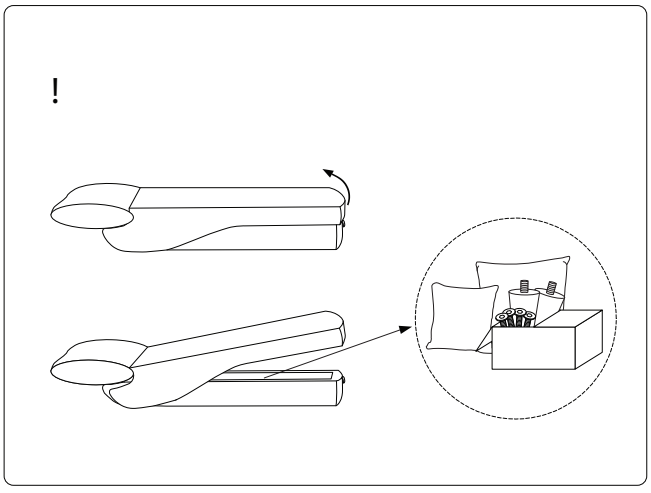
!

1

A	B	E	G	I
		 M8 x 70	 Ø21	
x 1	x 1	x 6	x 6	x 1

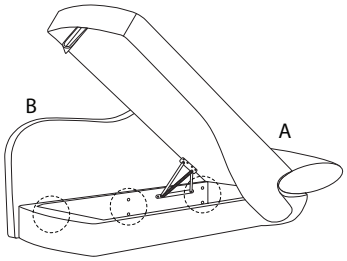

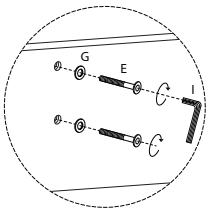

2

C	D	F	H	I
		 M8 x 50	 Ø17	
x 4	x 2	x 2	x 2	x 1

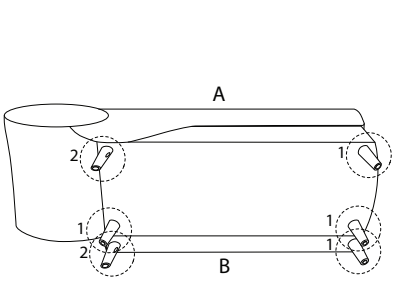

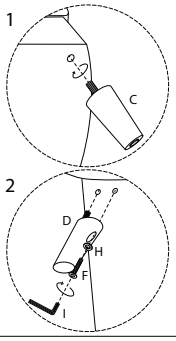

3

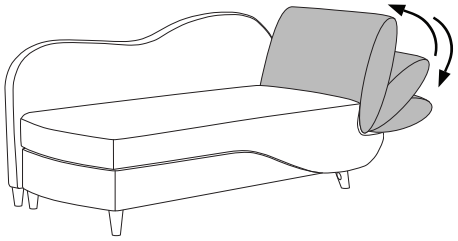

4

J	K
	
x 1	x 2

