PERRY

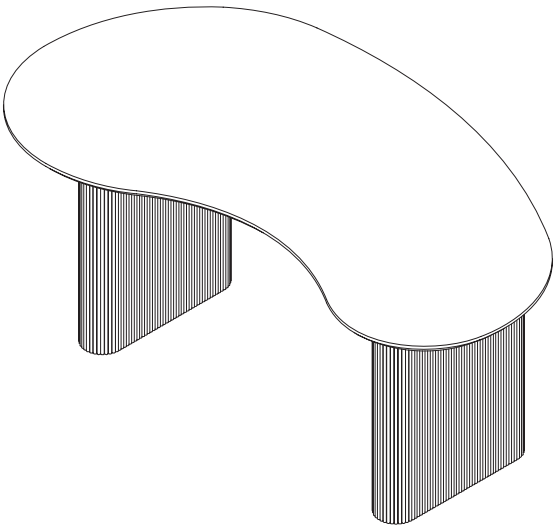

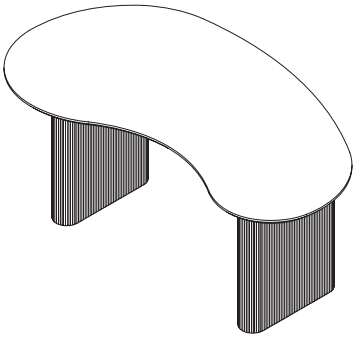

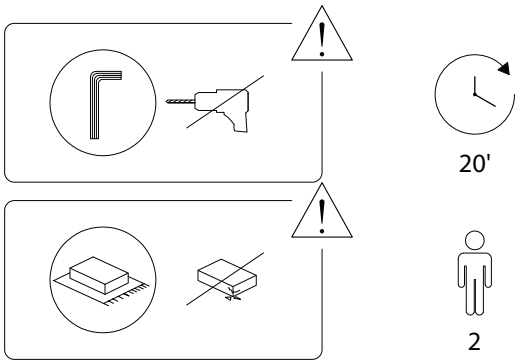

2464/PERRY/270625/

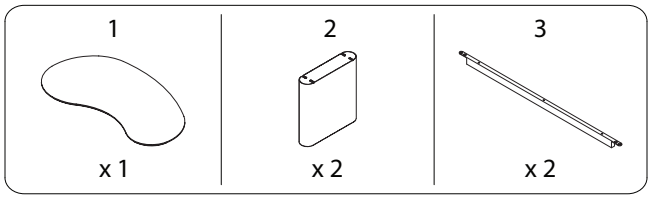

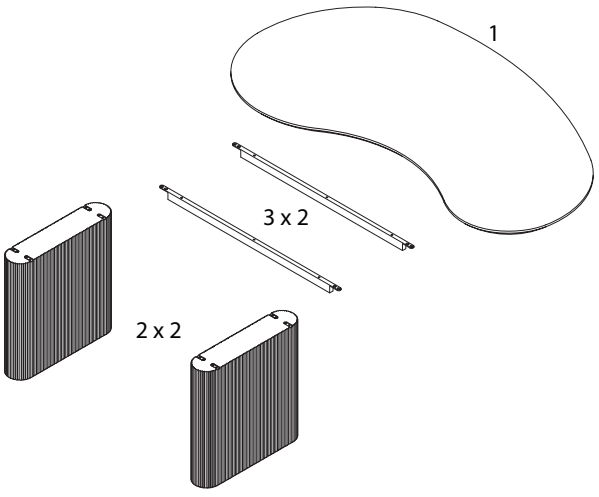

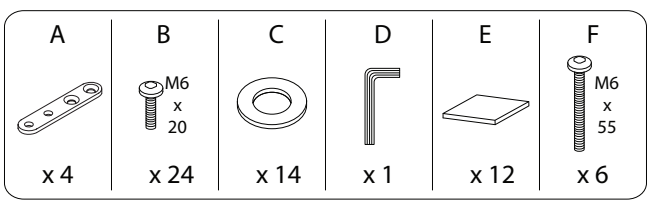

2464/PERRY/270625/

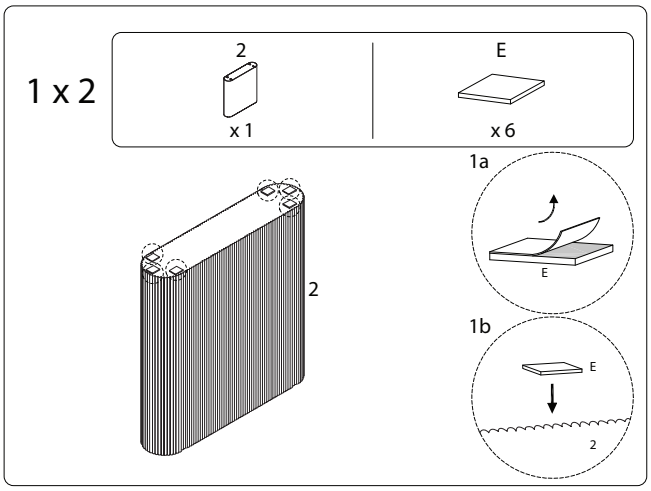

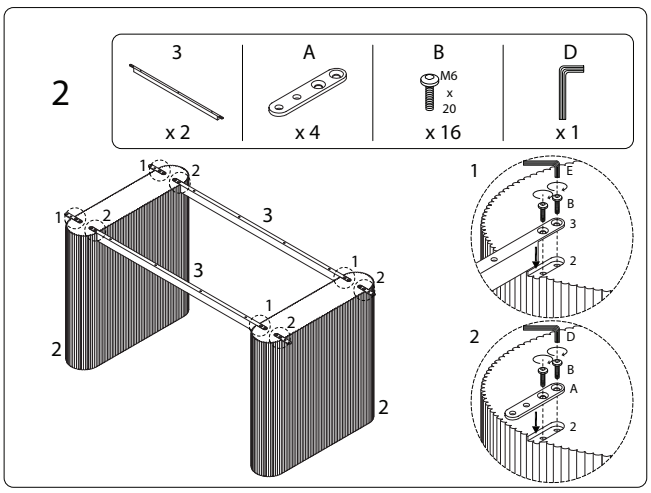

2464/PERRY/270625/

3

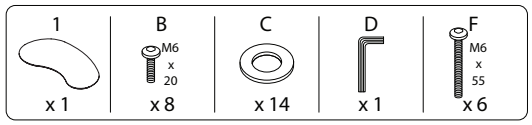

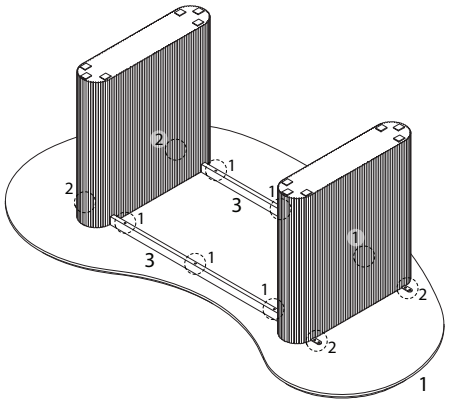

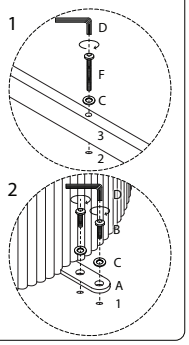

2464/PERRY/270625/