LUNAN

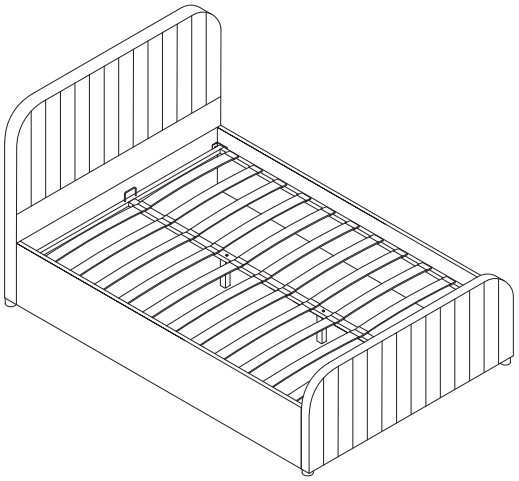

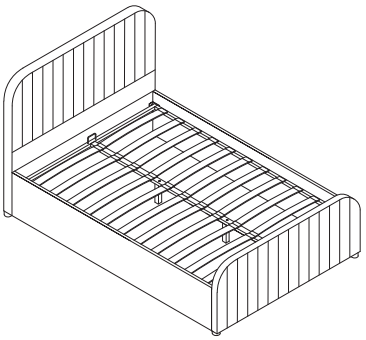

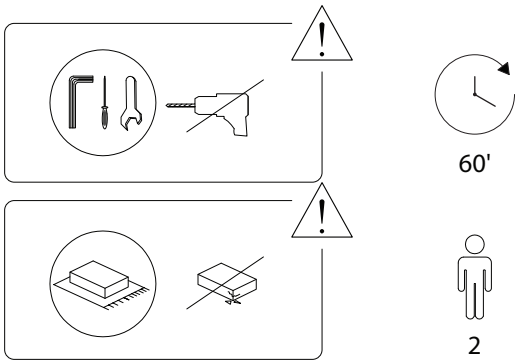

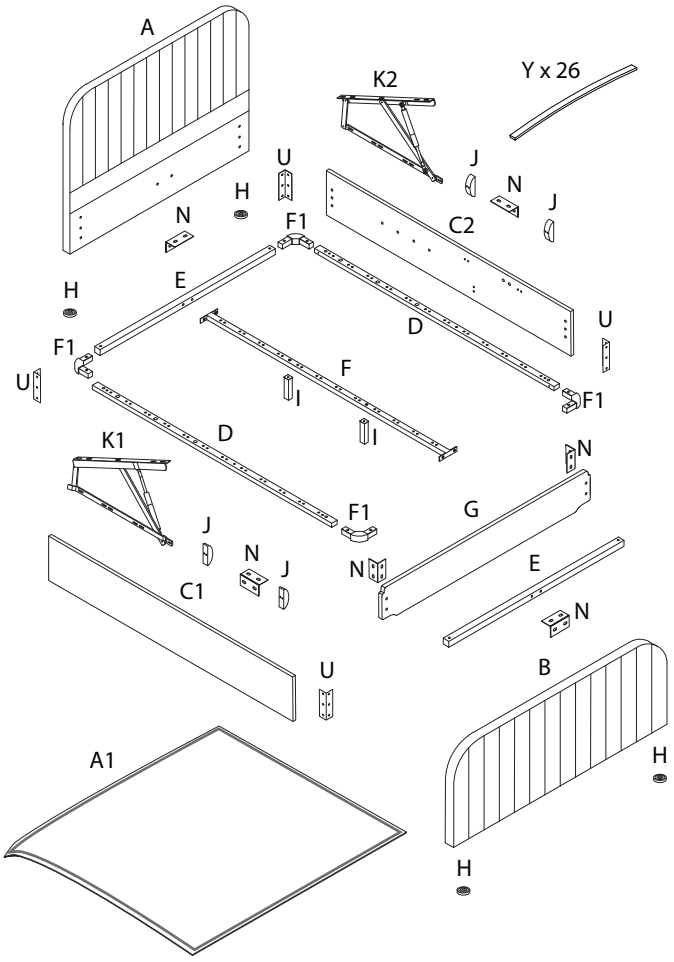

A x 1	B x 1	C1 x 1
C2 x 1	D x 2	E x 2
F x 1	G x 1	H x 4
I x 2	J x 4	K1 x 1
K2 x 1	M x 2	N x 6

O	P	Q
		
x 1	x 4	x 2

R	S	T
		
x 18	x 36	x 2

U	V	W	X
			
x 4	x 18	x 4	x 13

Y	Z	A1
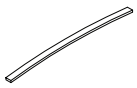		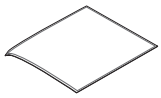
x 26	x 26	x 1

B1	D1	E1	F1
			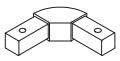
x 1	x 8	x 12	x 4

1

A	B	H	P
			
x 1	x 1	x 4	x 4

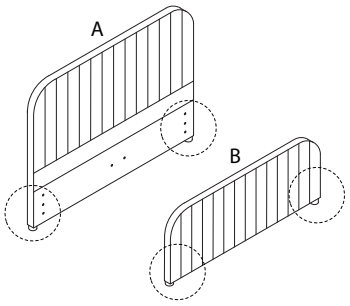

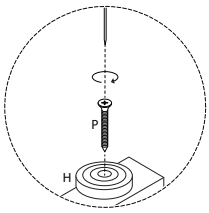

2

C1	C2	M	S	U	E1
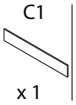					
x 1	x 1	x 1	x 12	x 4	x 12

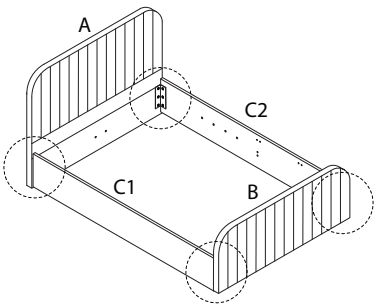

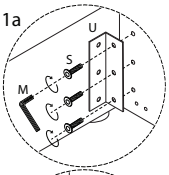

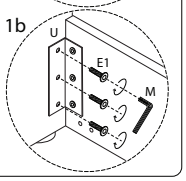

3

J	D1
	
x 4	x 8

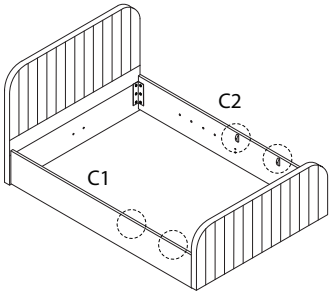

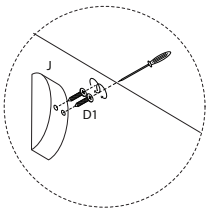

4

M	N	S
		
x 1	x 4	x 8

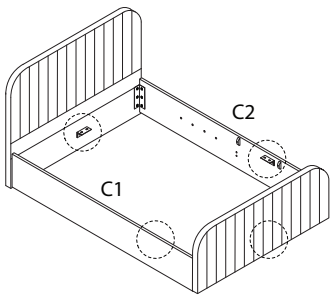

5

D	E	M	R	T	V	F1
x 2	x 2	x 1	x 8	x 1	x 8	x 4

6

F	M	R	T	V
x 1	x 1	x 4	x 1	x 4

7

I x 2 | M x 1 | Q M8 x 50 x 2

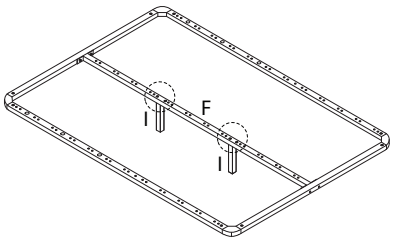

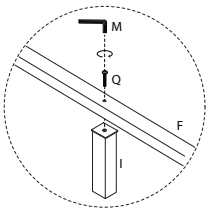

8

K1 x 1 | K2 x 1 | M x 1 | S M8 x 20 x 8

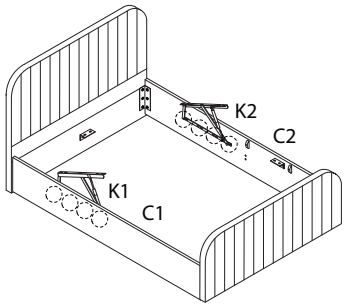

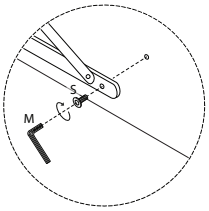

9

W x 4

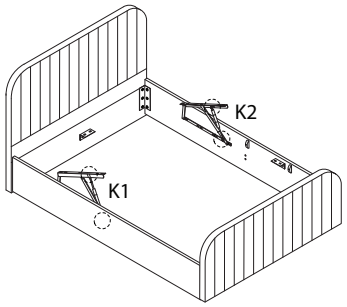

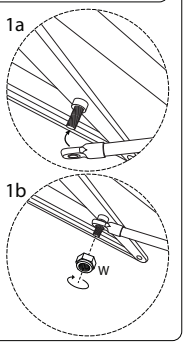

10

M x 1 | R M8 x 40 x 6 | T x 1 | V x 6

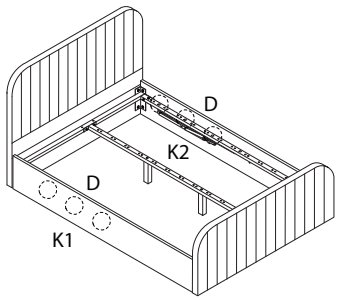

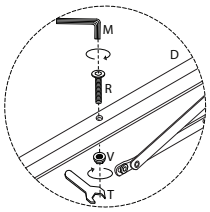

11

O x 1

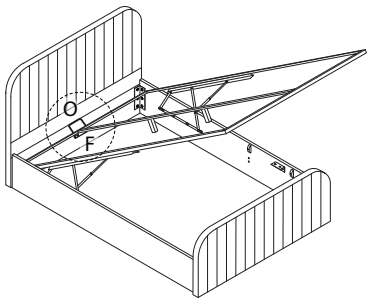

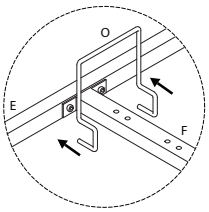

12

B1 x 1

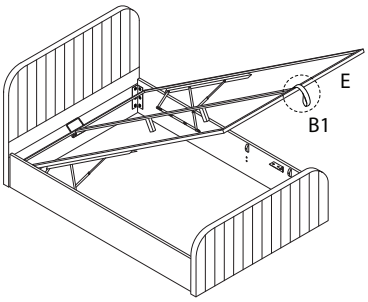

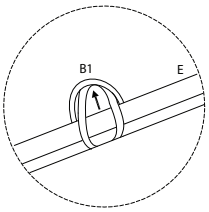

13

A1 x 1

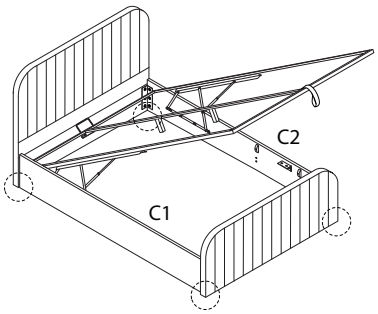

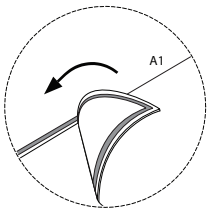

14

G x 1 | M x 1 | N x 2 | S M8 x 20 x 4

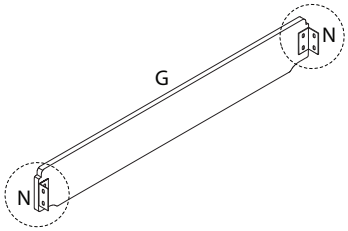

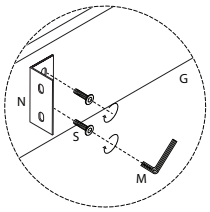

15

M	S
	
x 1	x 4

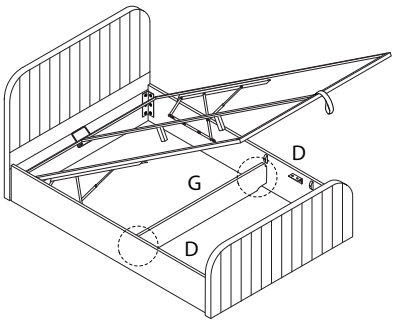

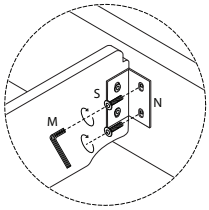

!

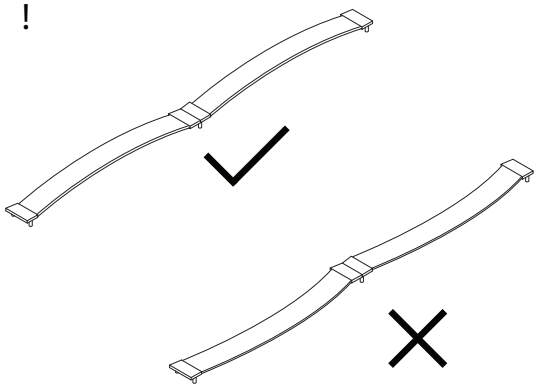

16 x 13

X	Y	Z
	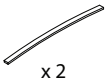	
x 1	x 2	x 2

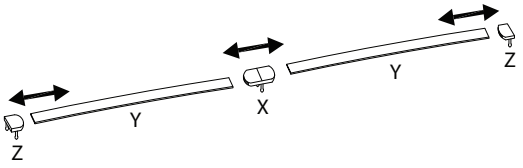

!

