MERCURER

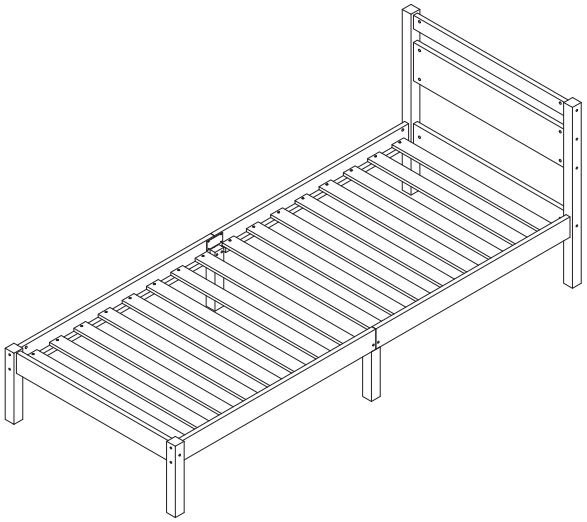

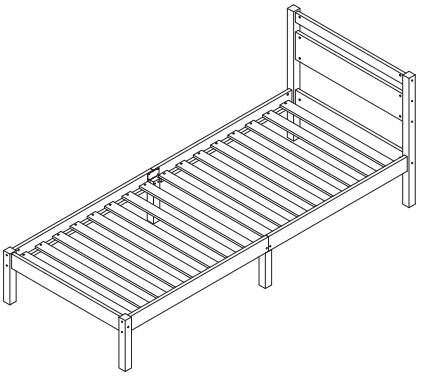

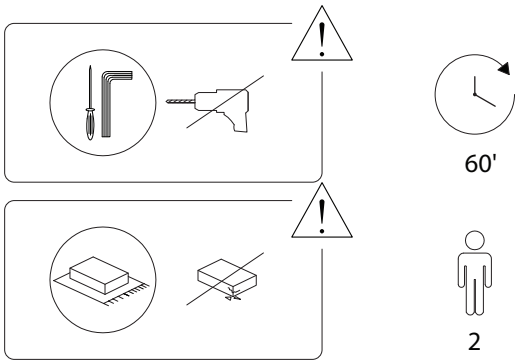

2808/MERCURER/191026

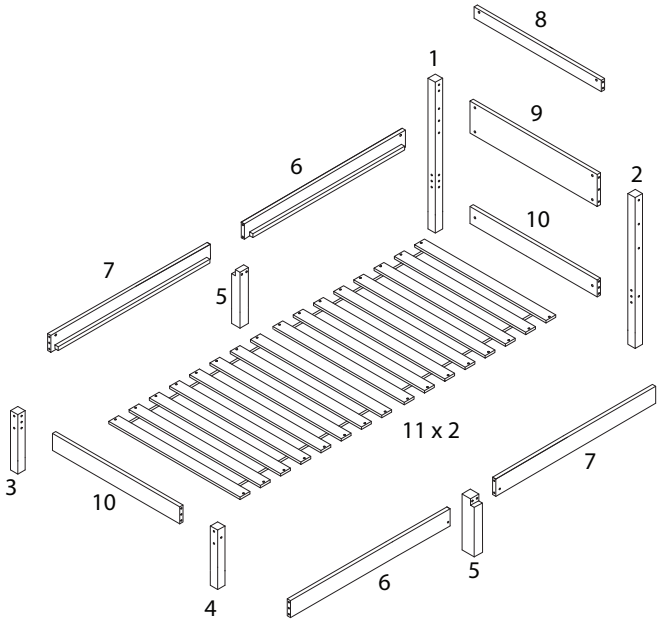

2808/MERCURER/191026

1 x 1	2 x 1	3 x 1	4 x 1
5 x 2	6 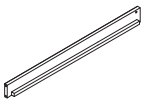 x 2	7 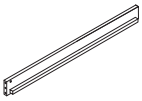 x 2	8 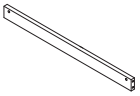 x 1
9 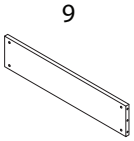 x 1	10 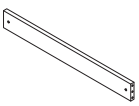 x 2	11 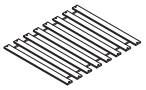 x 2	A 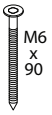 M6 x 90 x 18
B x 18	C x 20	D M6 x 40 x 4	E M8 x 18 x 4
F x 2	G M4 x 15 x 8	H M4 x 30 x 32	I x 1

2808/MERCURER/191026

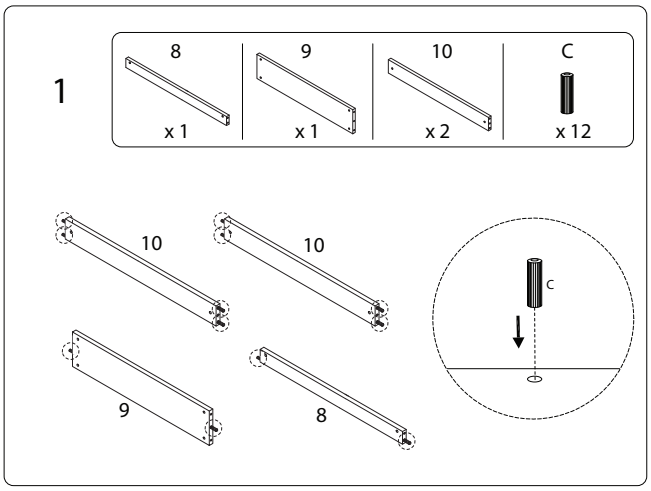
1
8
x 1
9
x 1
10
x 2
C
x 12
10
10
9
8
C

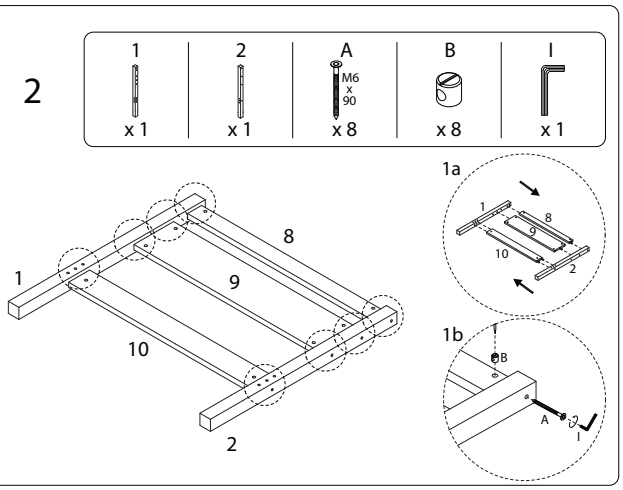
2
1
x 1
2
x 1
A
M6
x
90
x 8
B
x 8
I
x 1
1a
1b
1
8
9
10
2
B
A
I

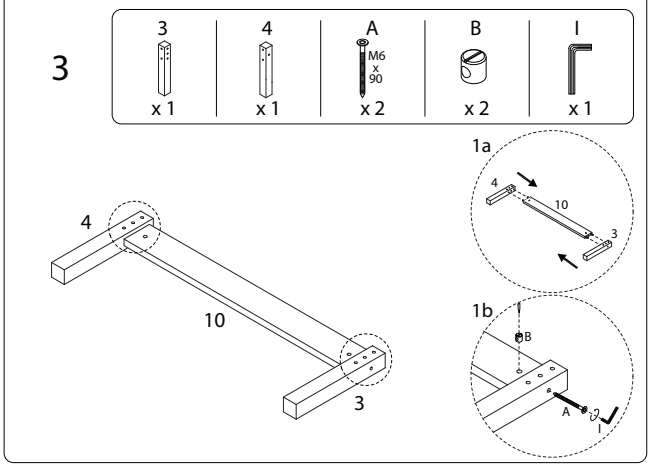
3
3
x 1
4
x 1
A
M6
x
90
x 2
B
x 2
I
x 1
1a
1b
4
10
3
B
A
I

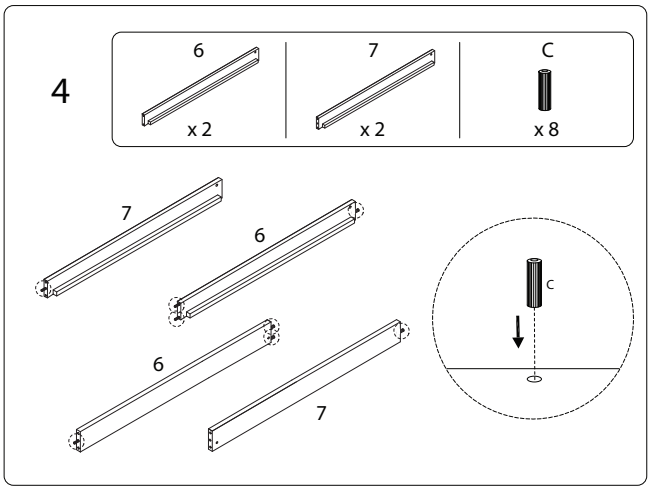
4
6
x 2
7
x 2
C
x 8
7
6
6
7
C

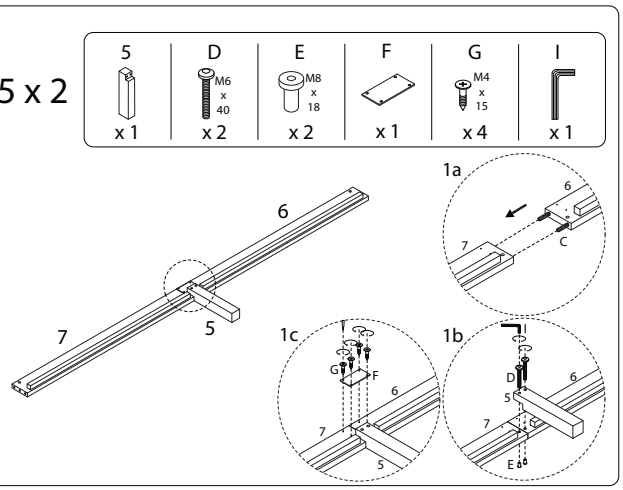
5 x 2
5
x 1
D
M6
x
40
x 2
E
M8
x
18
x 2
F
x 1
G
M4
x
15
x 4
I
x 1
1a
1b
1c
6
7
5
C
G
F
D
E

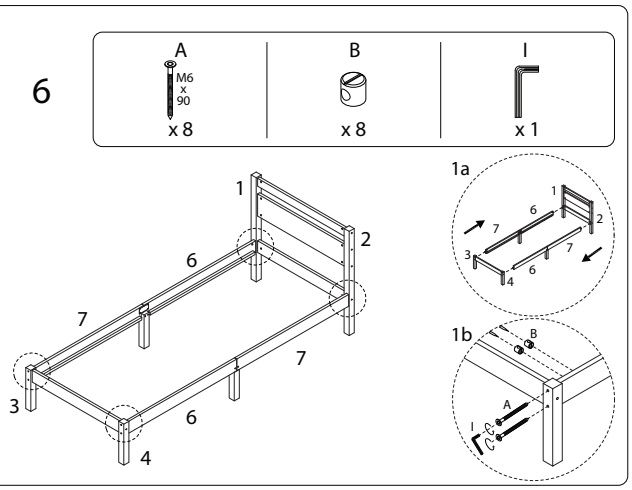
6
A
M6
x
90
x 8
B
x 8
I
x 1
1a
1b
1
2
6
7
3
4
B
A
I

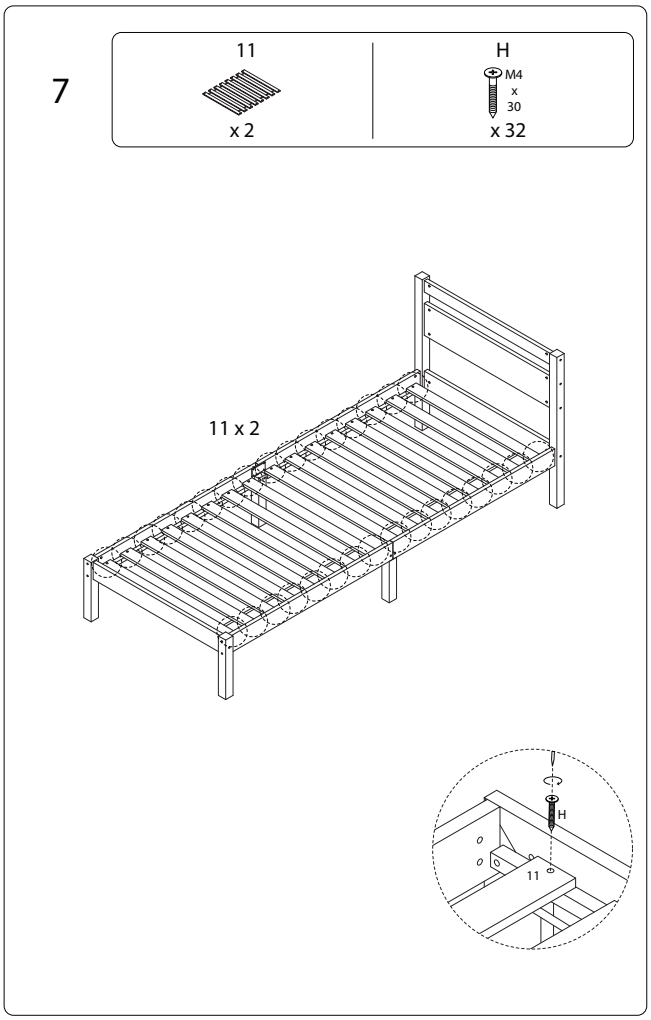
7
11
x 2
H
M4
x
30
x 32
11 x 2
H
11