HAMILTON

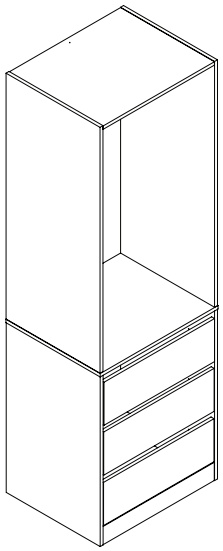

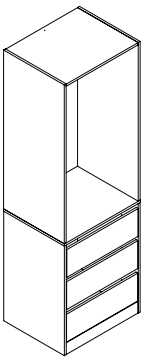

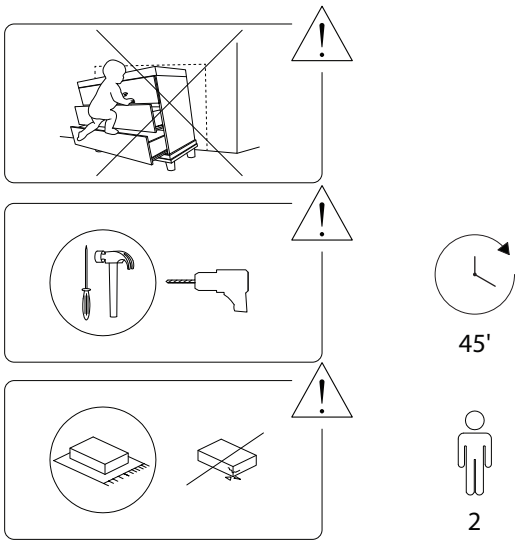

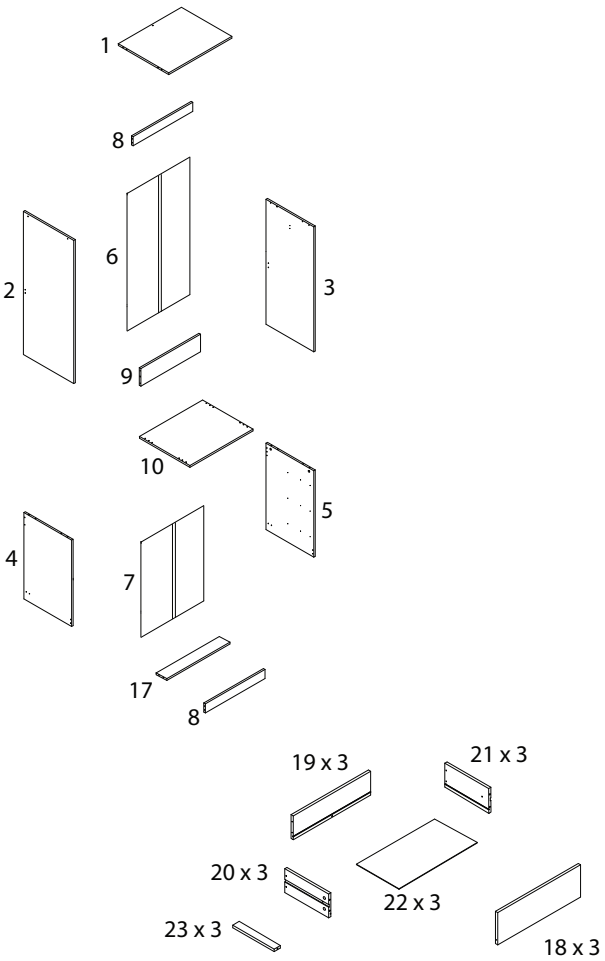

A x 19	B x 19	C x 6	D M4 x 40 x 39
E x 20	F x 6	G M3 x 14 x 6	H M3 x 12 x 22
I M4 x 14 x 6	J x 1	K x 4	L x 4
M x 3	N x 27	O x 2	P x 1
Q M4 x 30 x 1	R M4 x 14 x 1	S x 1	T x 6

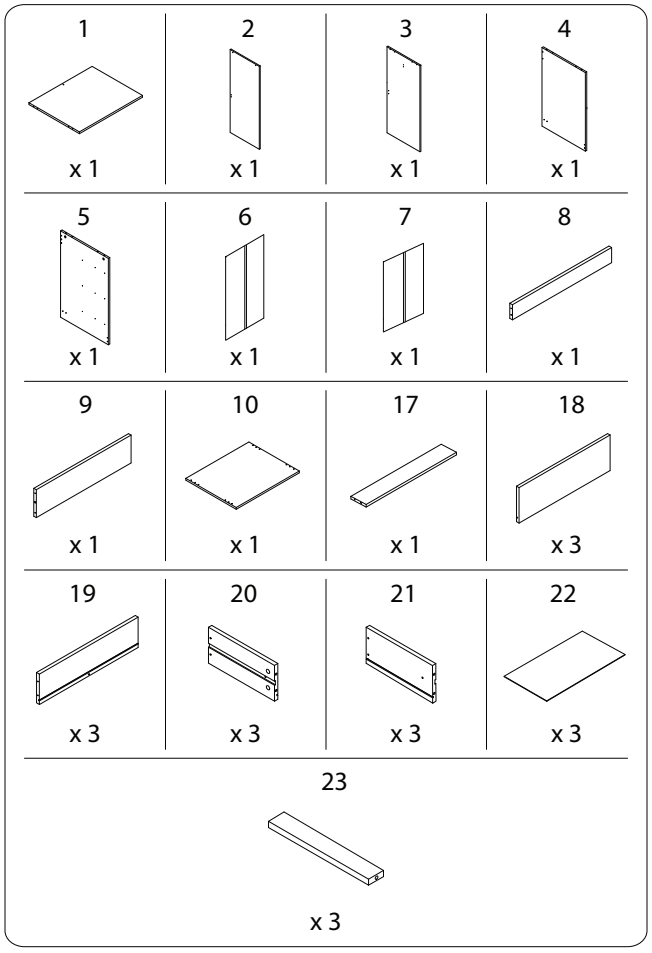
1
x 1
2
x 1
3
x 1
4
x 1
5
x 1
6
x 1
7
x 1
8
x 1
9
x 1
10
x 1
17
x 1
18
x 3
19
x 3
20
x 3
21
x 3
22
x 3
23
x 3

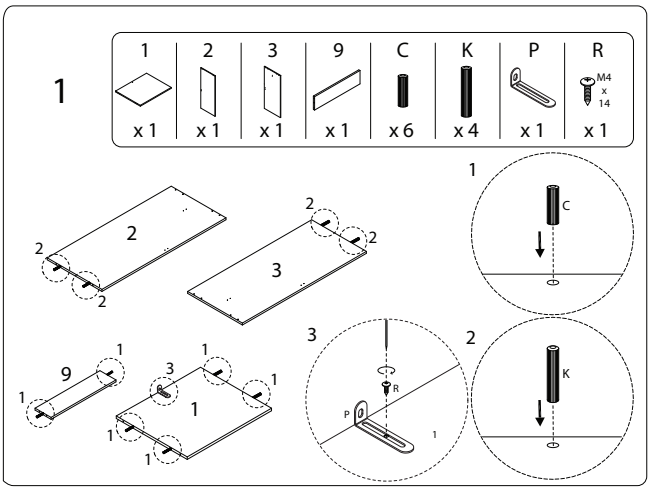
1
1
x 1
2
x 1
3
x 1
9
x 1
C
x 6
K
x 4
P
x 1
R
M4 x 14
x 1

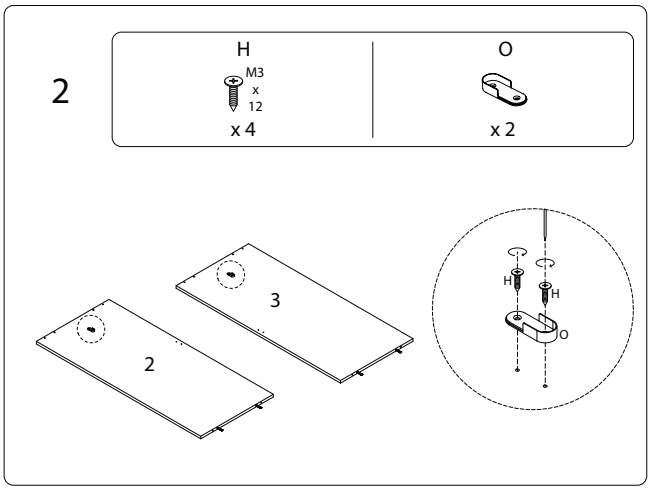
2
H
M3 x 12
x 4
O
x 2

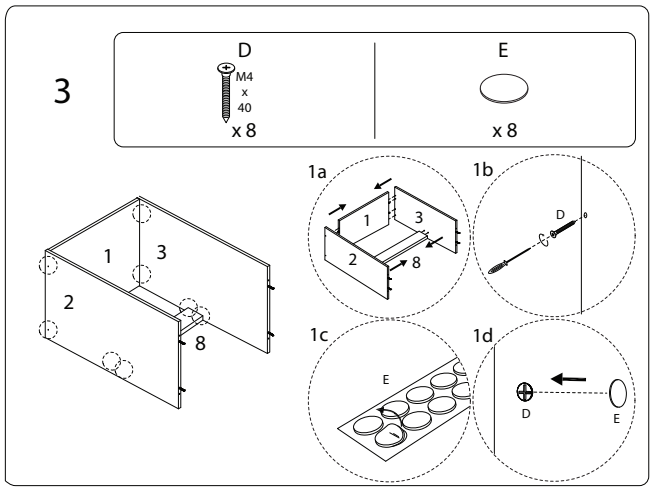
3
D
M4 x 40
x 8
E
x 8
1a
1b
1c
1d

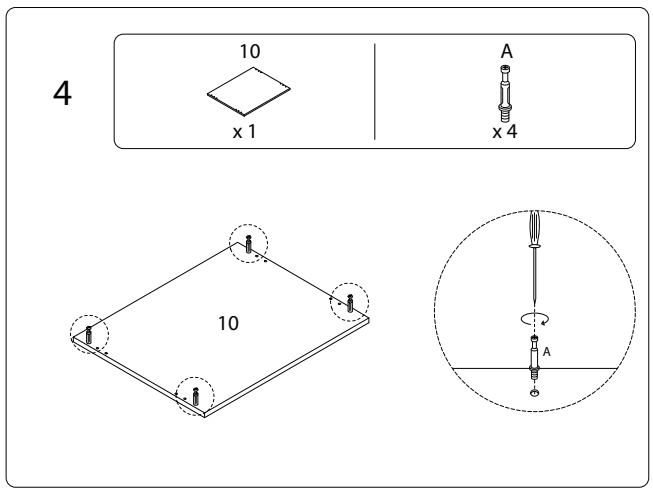
4
10
x 1
A
x 4

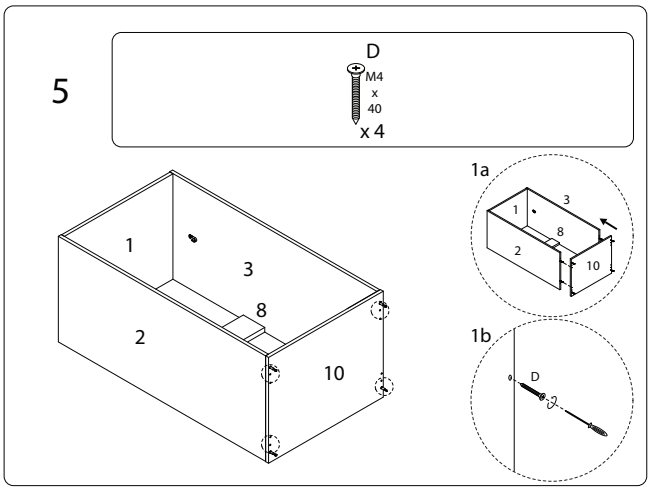
5
D
M4 x 40
x 4
1a
1b

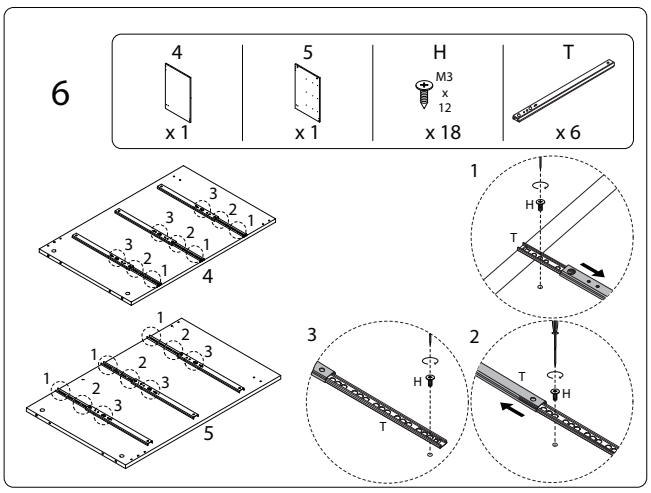
6
4
x 1
5
x 1
H
M3 x 12
x 18
T
x 6

7

D
M4 x 40
x 6

E
x 6

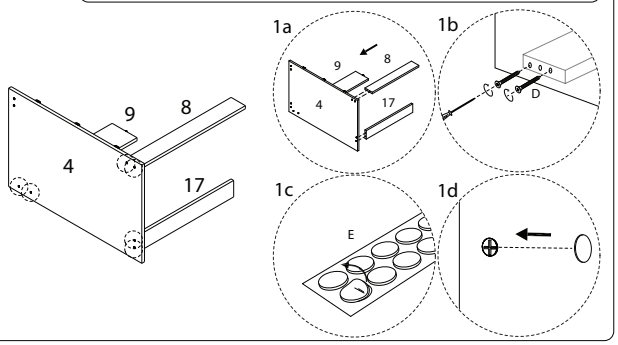

8

D
M4 x 40
x 6

E
x 6

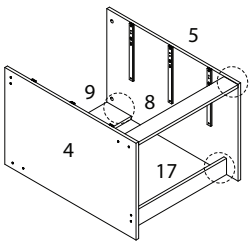

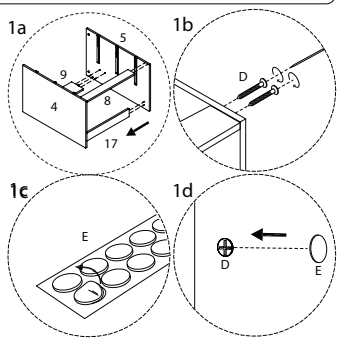

9

F
x 4

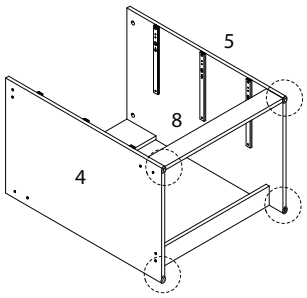

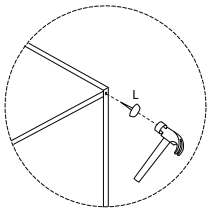

10

B
x 4

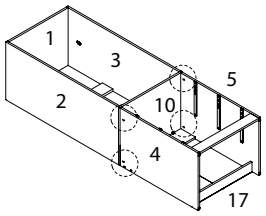

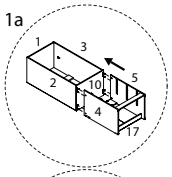

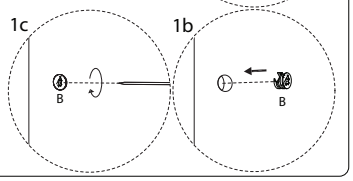

11

6
x 1

7
x 1

M
x 3

N
x 27

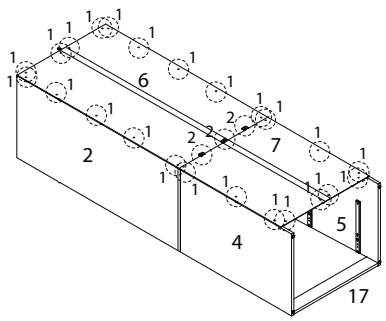

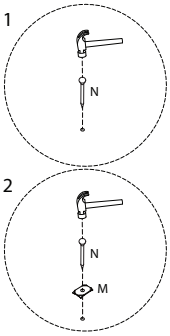

13

J
x 1

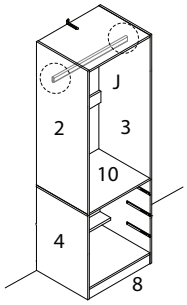

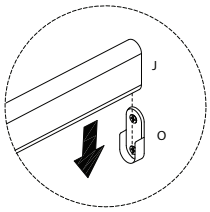

12

I
M4 x 30
x 1

J
x 1

K
x 1

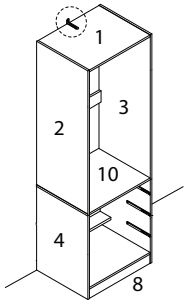

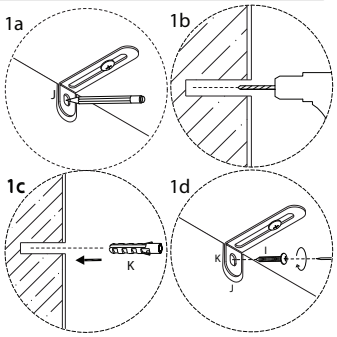

14 x 3

18
x 1

A
x 5

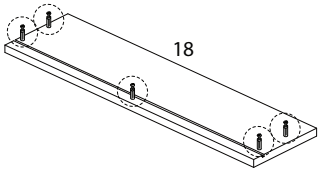

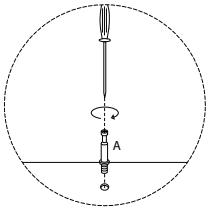

15 x 3

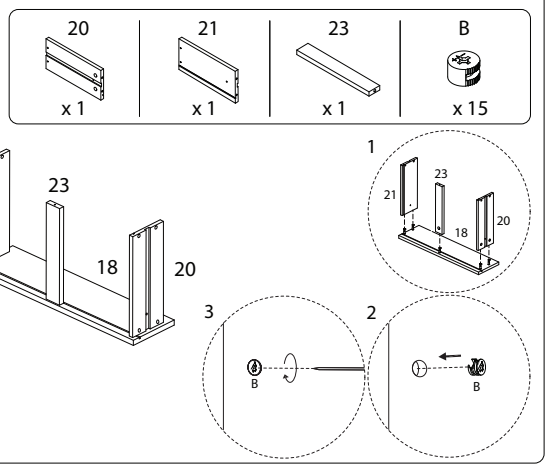

16 x 3

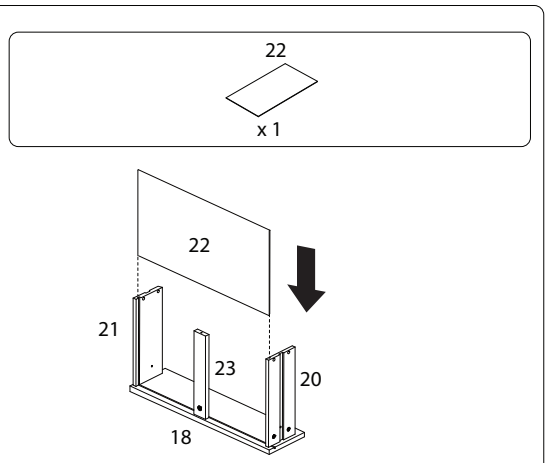

13/15

2949/HAMILTON/021026

17 x 3

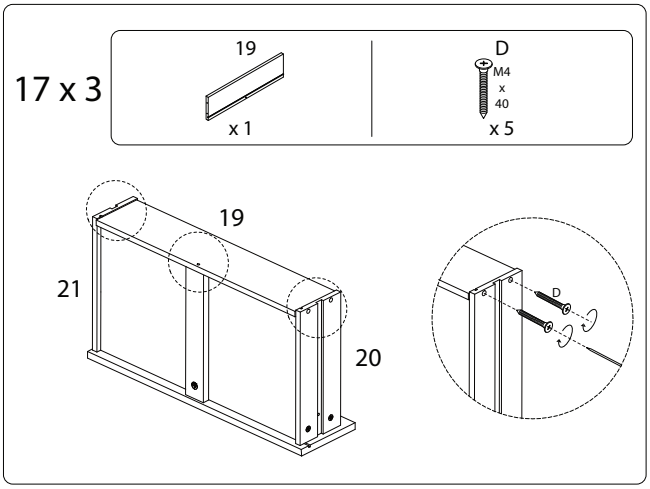

18 x 3

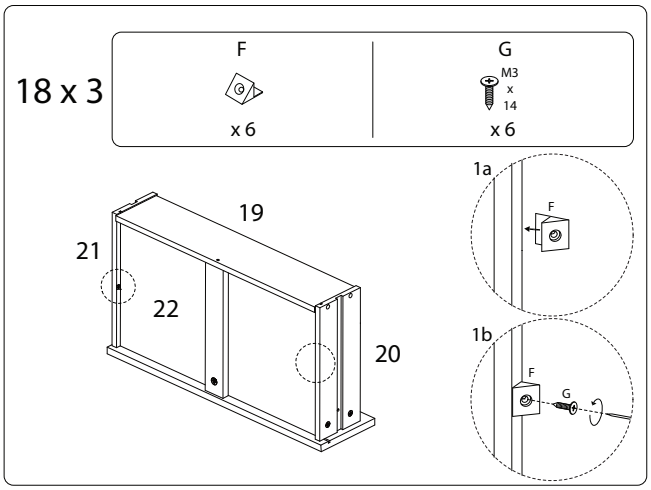

14/15

2949/HAMILTON/021026

19

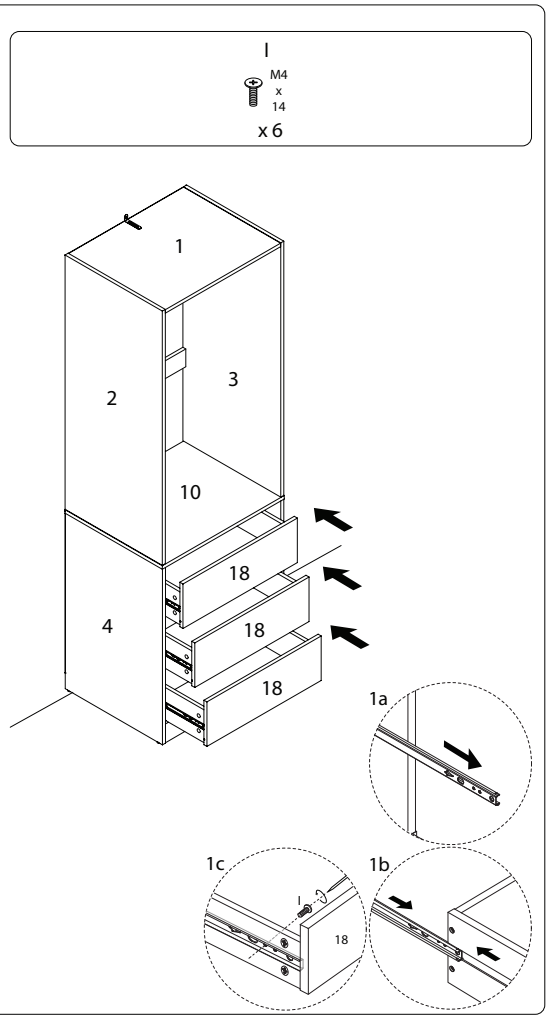

15/15

2949/HAMILTON/021026