BICHENO

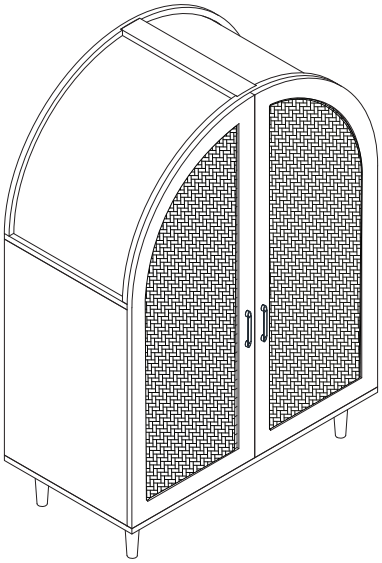

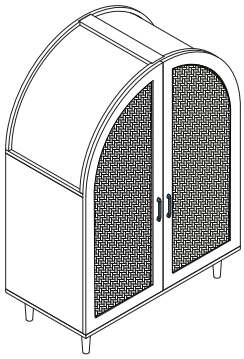

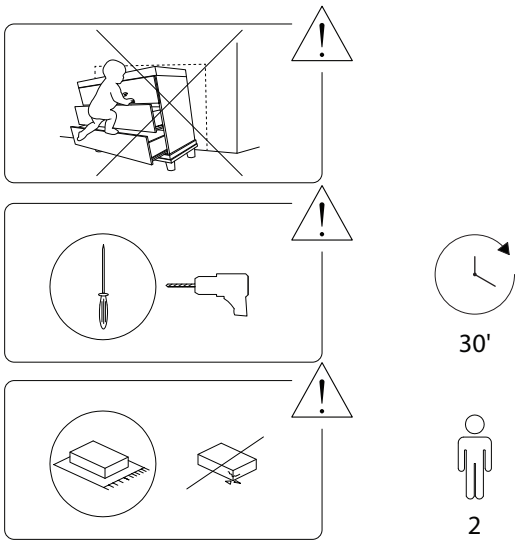
30'
2

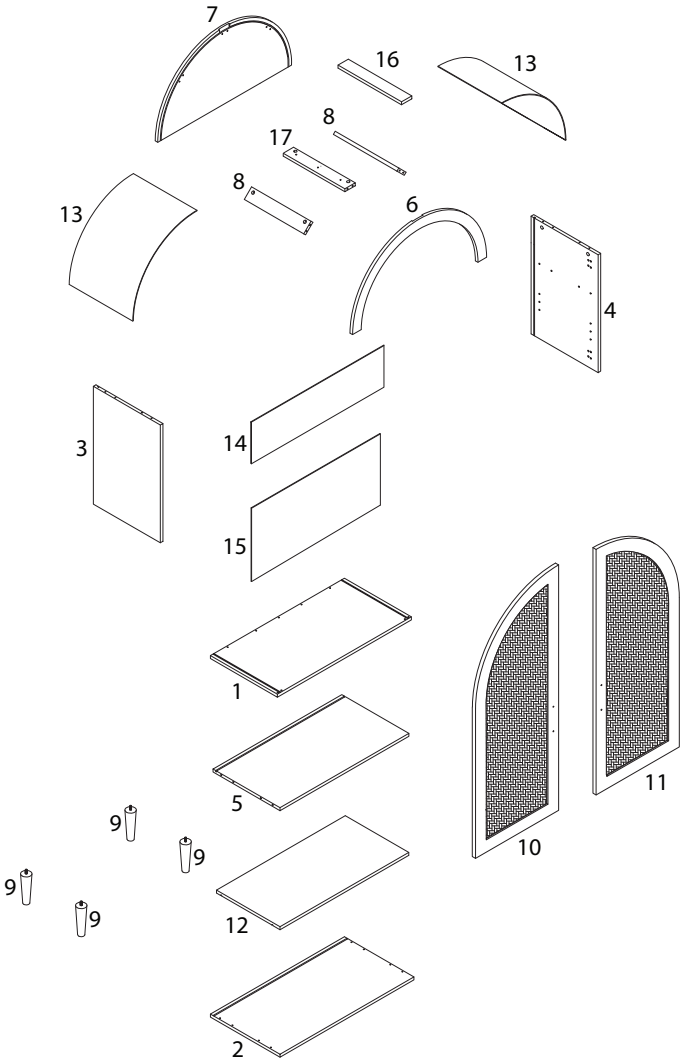
7
16
13
8
17
8
13
6
4
3
14
15
1
5
11
10
9
9
9
9
12
2

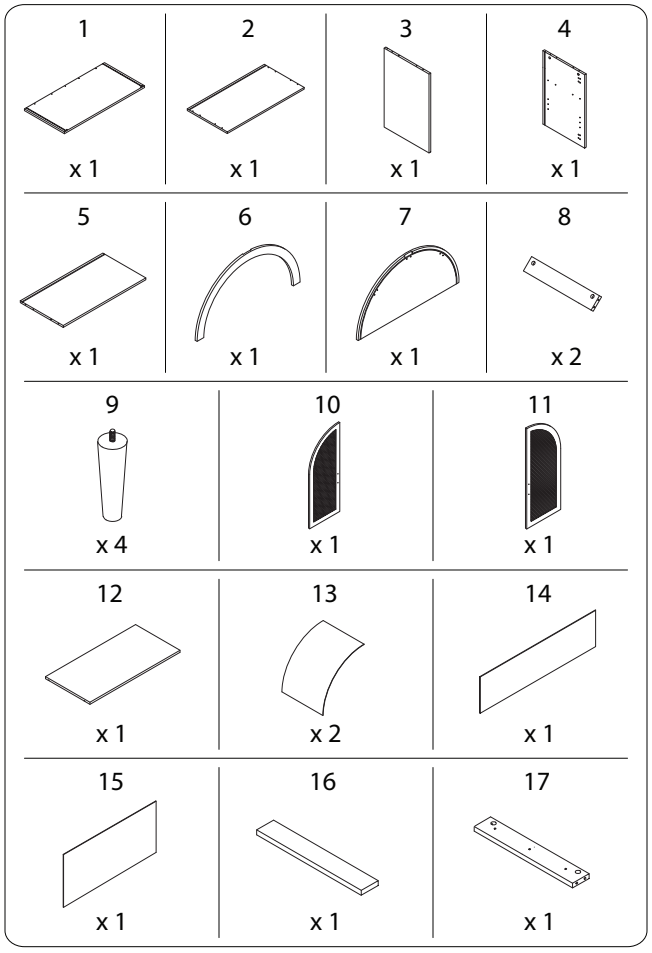
1
x 1
2
x 1
3
x 1
4
x 1
5
x 1
6
x 1
7
x 1
8
x 2
9
x 4
10
x 1
11
x 1
12
x 1
13
x 2
14
x 1
15
x 1
16
x 1
17
x 1

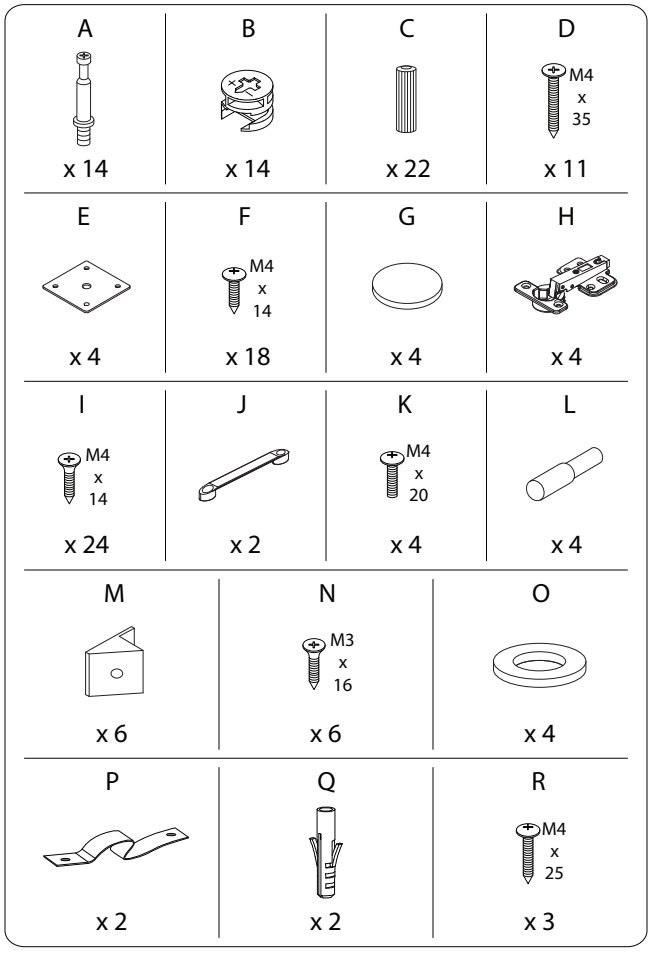
A
x 14
B
x 14
C
x 22
D
M4 x 35
x 11
E
x 4
F
M4 x 14
x 18
G
x 4
H
x 4
I
M4 x 14
x 24
J
x 2
K
M4 x 20
x 4
L
x 4
M
x 6
N
M3 x 16
x 6
O
x 4
P
x 2
Q
x 2
R
M4 x 25
x 3

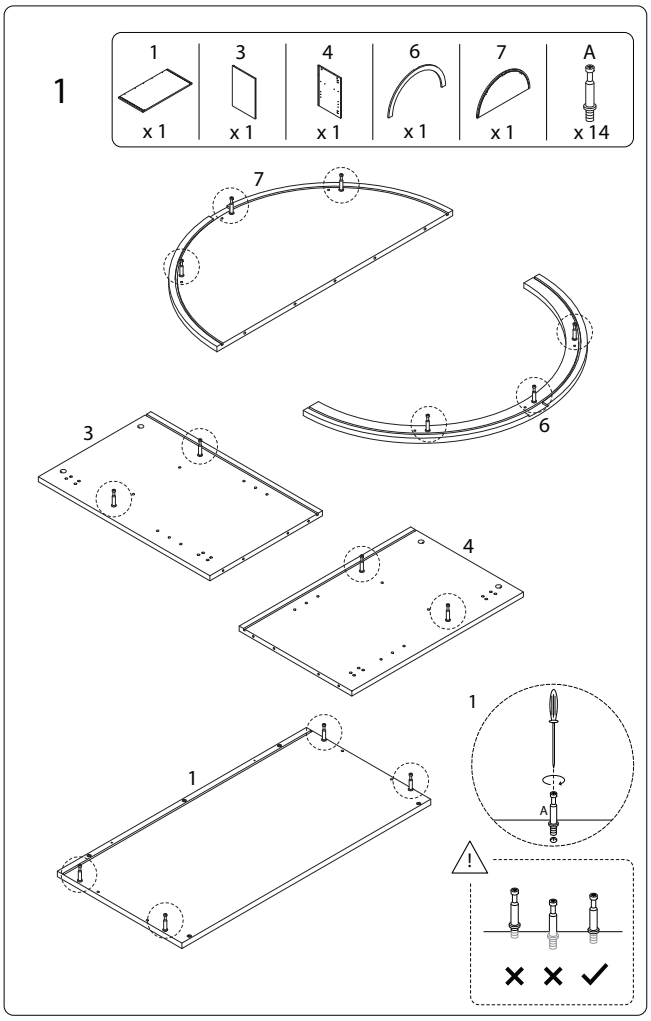
1
1 x 1
3 x 1
4 x 1
6 x 1
7 x 1
A x 14
7
6
3
4
1
1
A

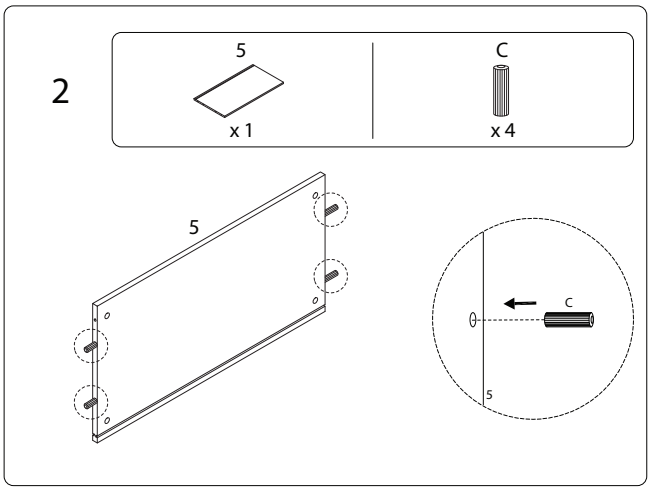
2
5
x 1
C
x 4
5
C
5

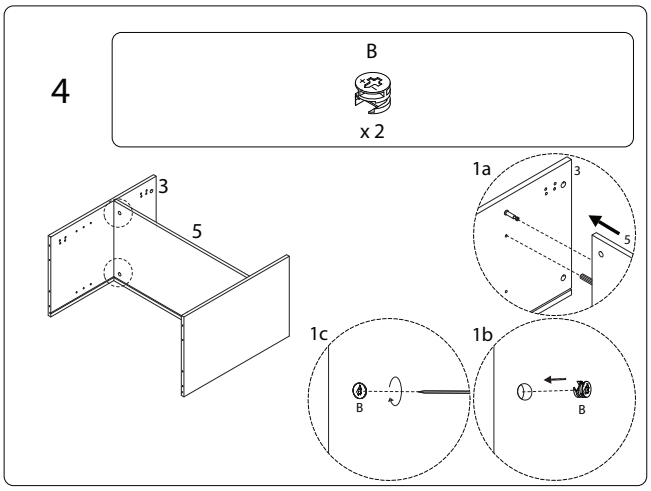
4
B
x 2
3
5
1a
3
5
1c
B
1b
B

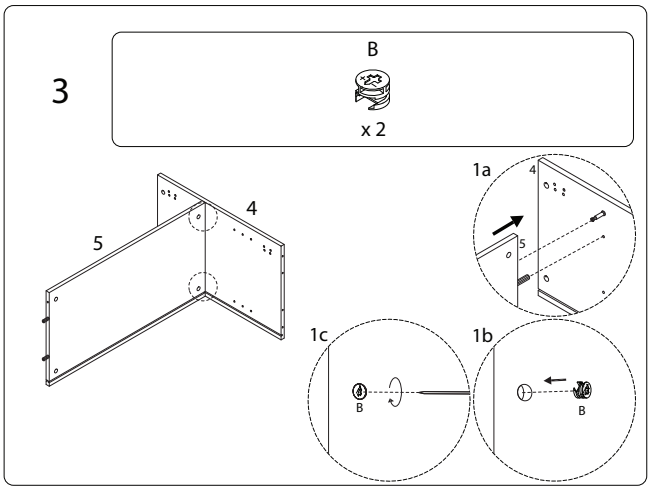
3
B
x 2
5
4
1a
4
5
1c
B
1b
B

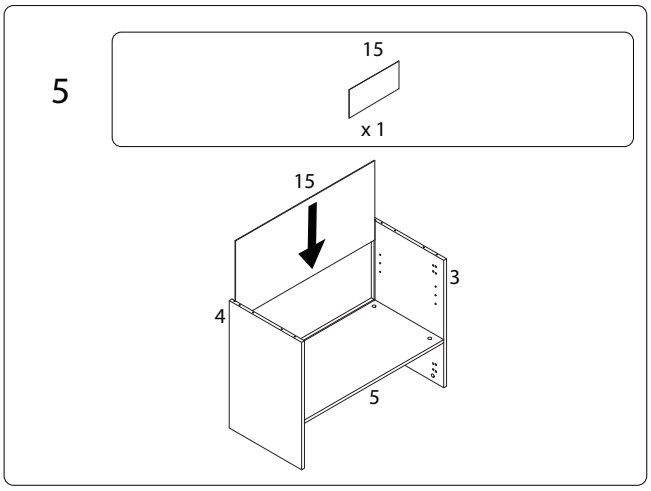
5
15
x 1
15
3
4
5

6

C
x 4

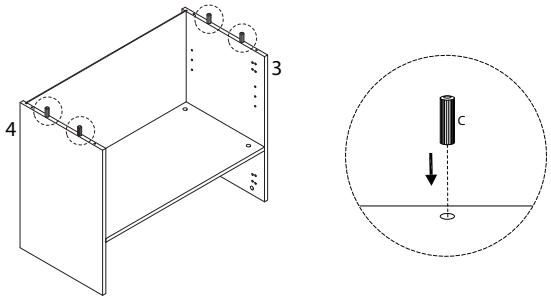

7

D
M4 x 35
x 4

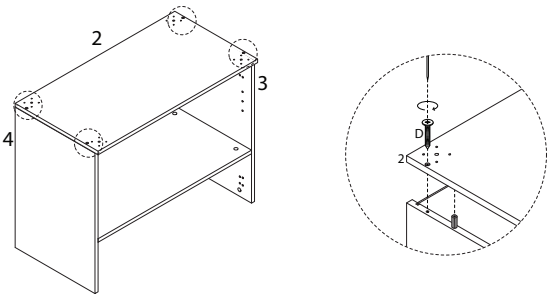

8

E
x 4

F
M4 x 14
x 16

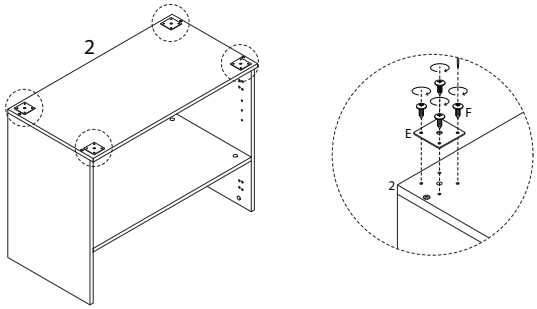

9

9
x 4

G
x 4

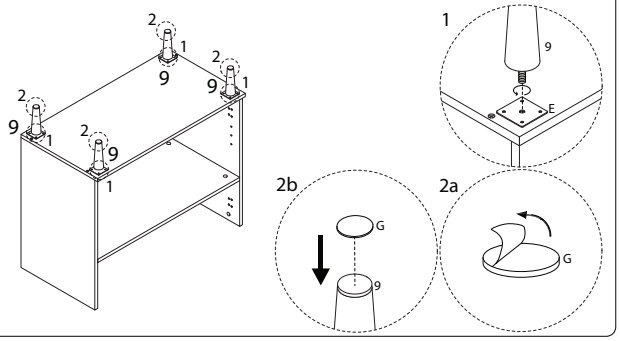

10

14
x 1

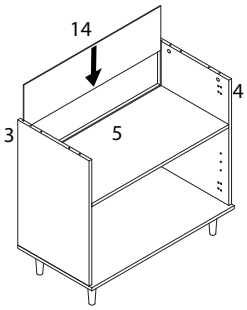

11

8
x 2

17
x 1

C
x 6

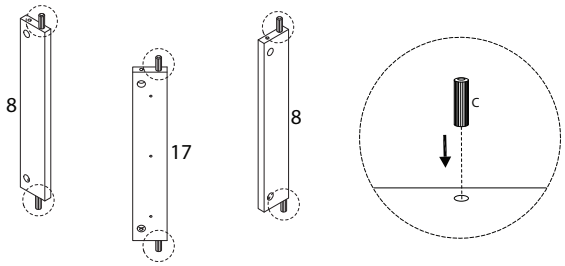

12

B
x 3

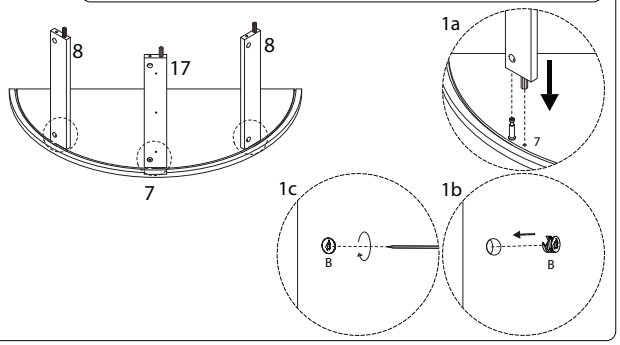

13

B
x 3

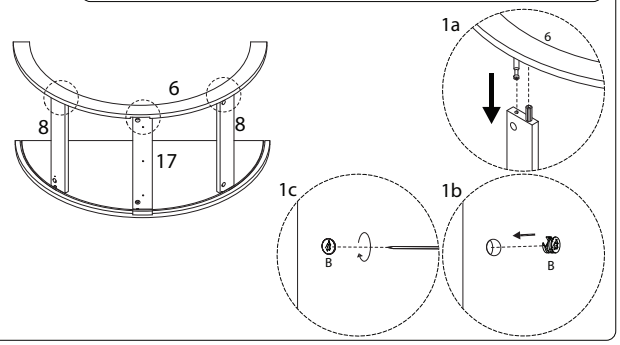

14

C

x 4

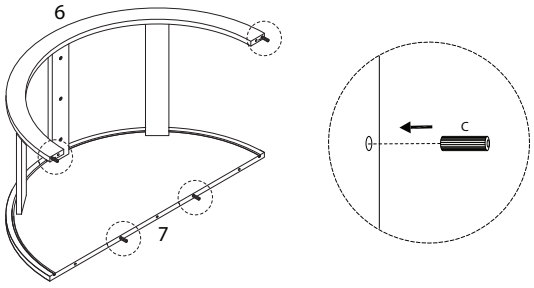

15

D

M4 x 35

x 5

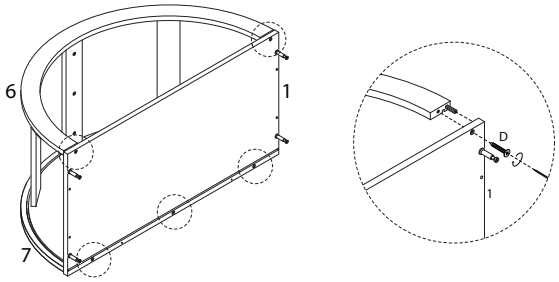

16

13

x 1

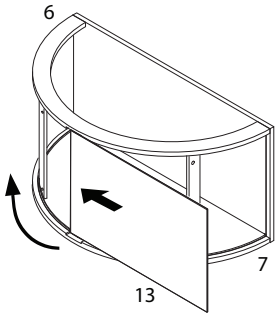

17

13

x 1

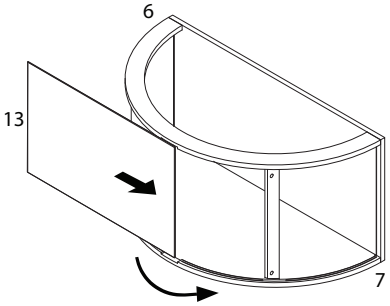

18

16

x 1

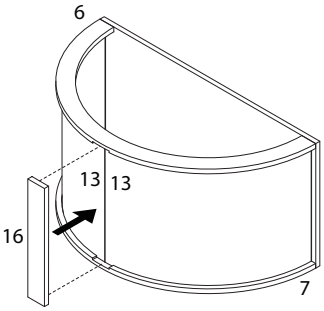

19

R

M4 x 25

x 3

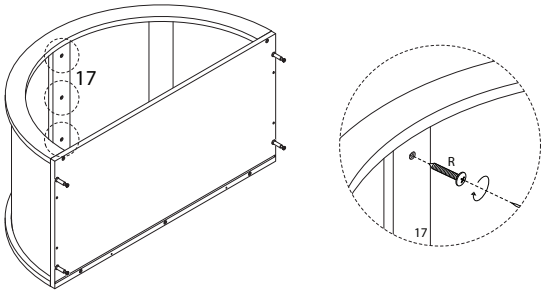

20

C

x 4

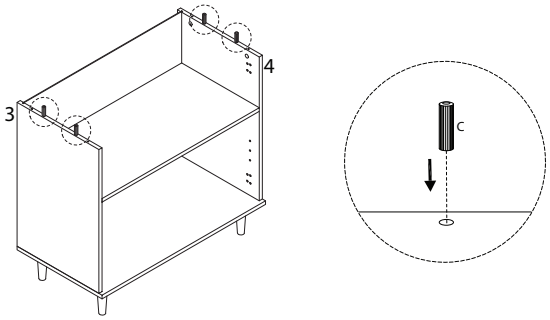

21

B

x 4

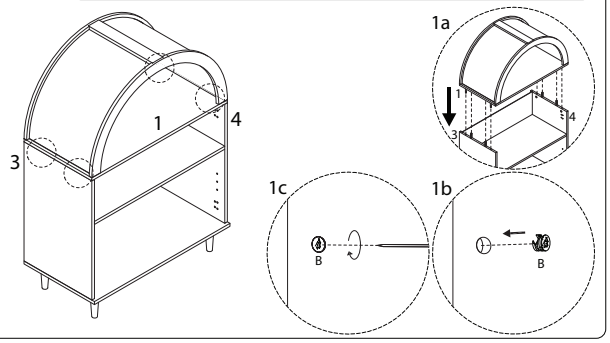

22

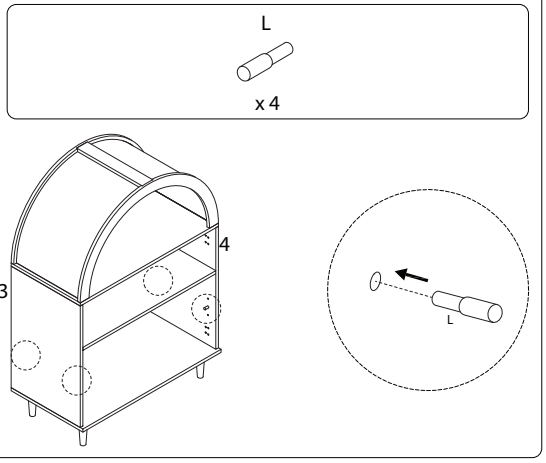

23

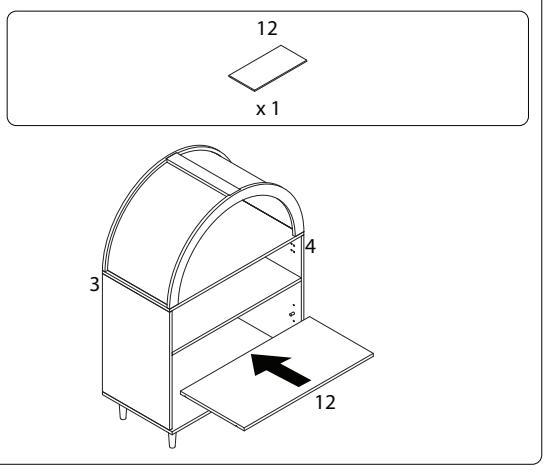

24

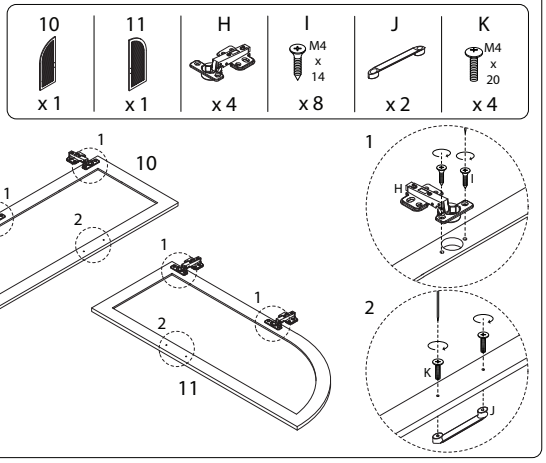

25

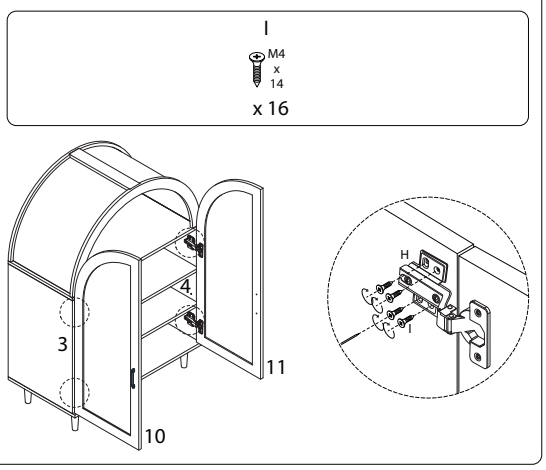

26

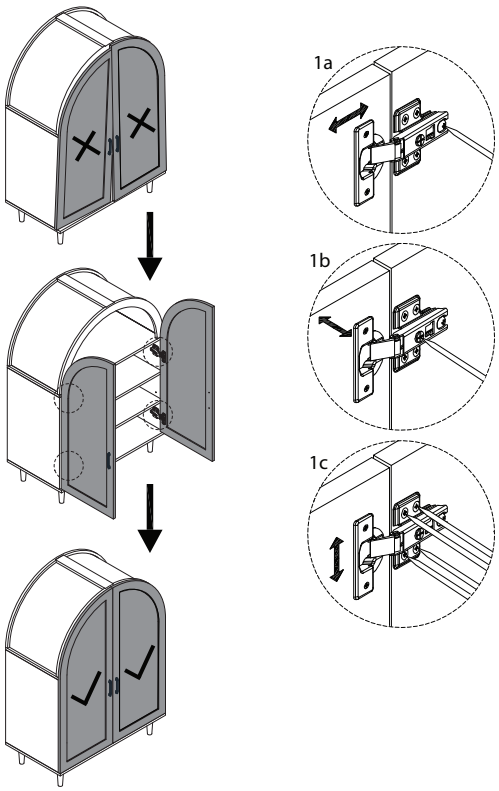

27

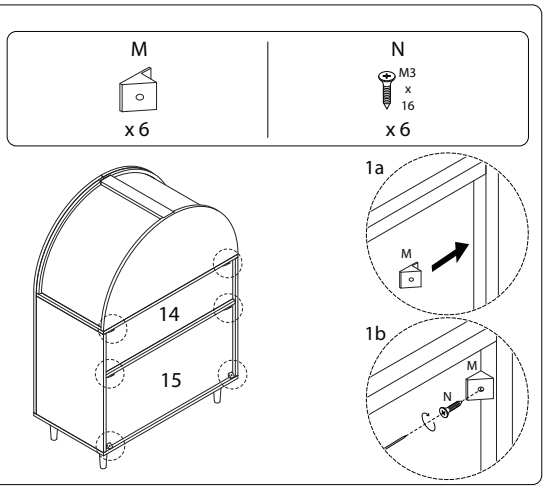

28

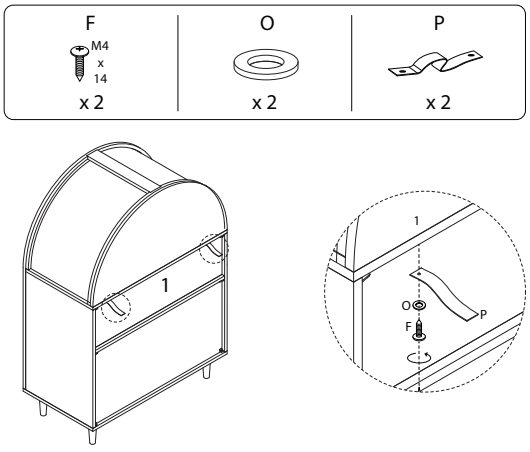

29

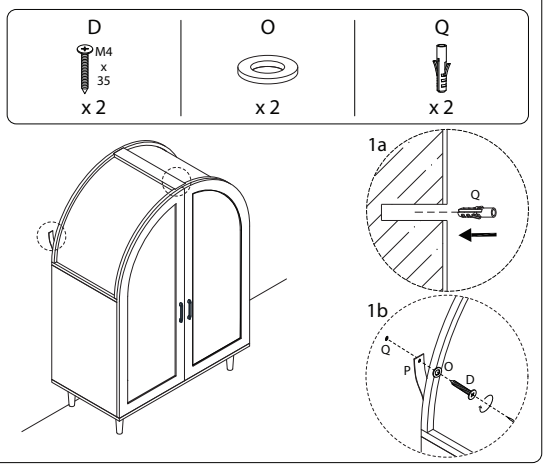

1251/BICHENO/210726/