

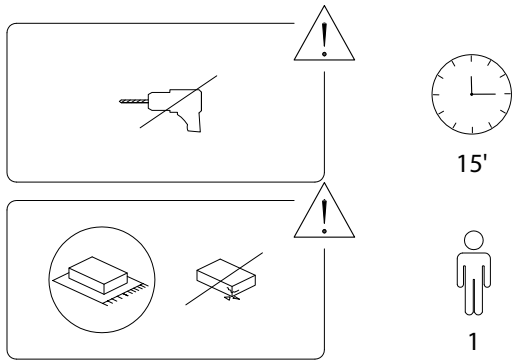

1/5

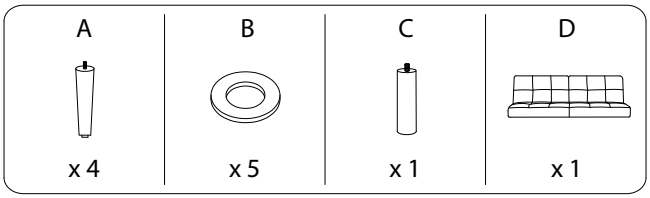

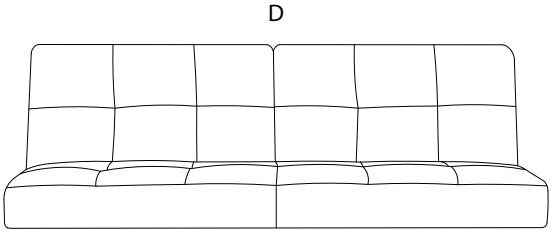

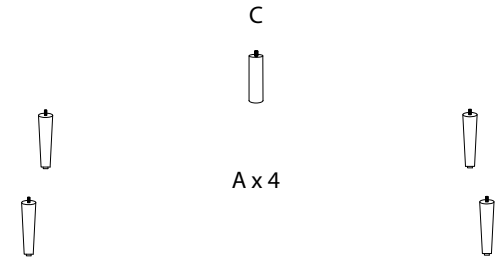

2/5

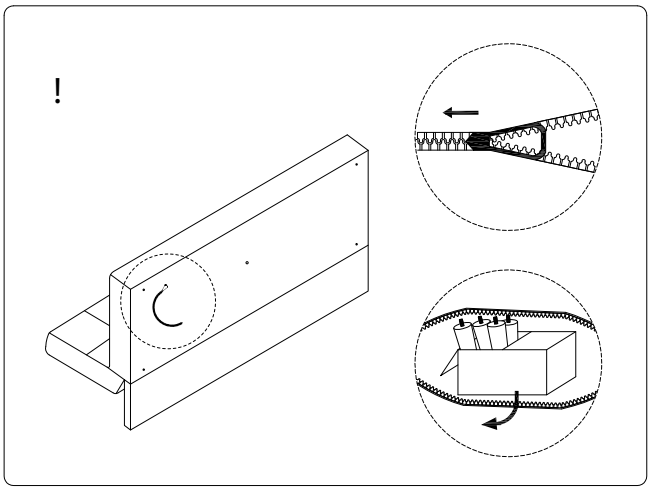

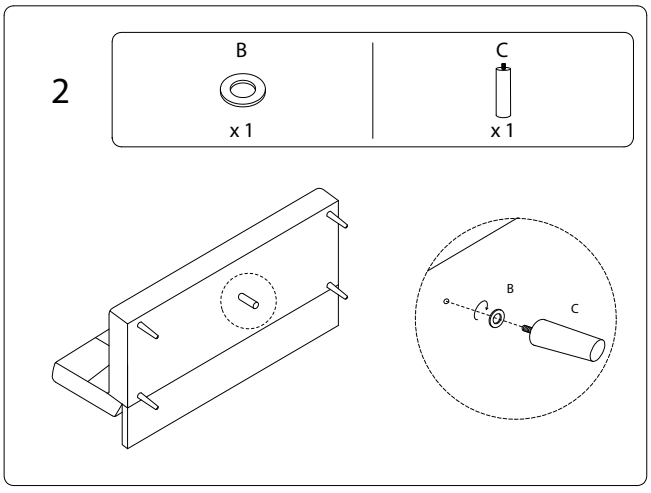

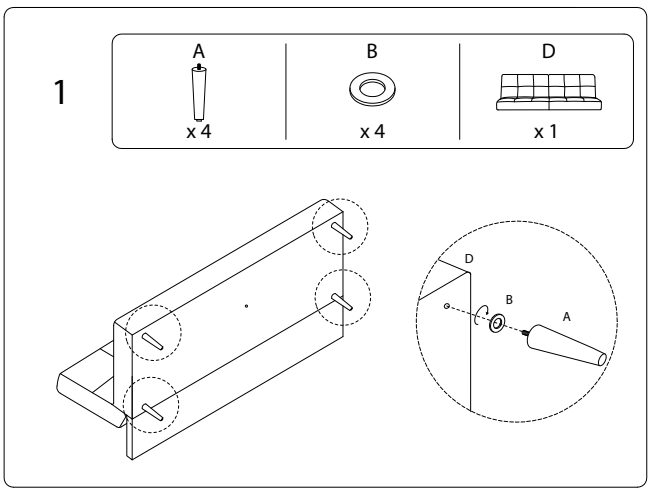

3/5

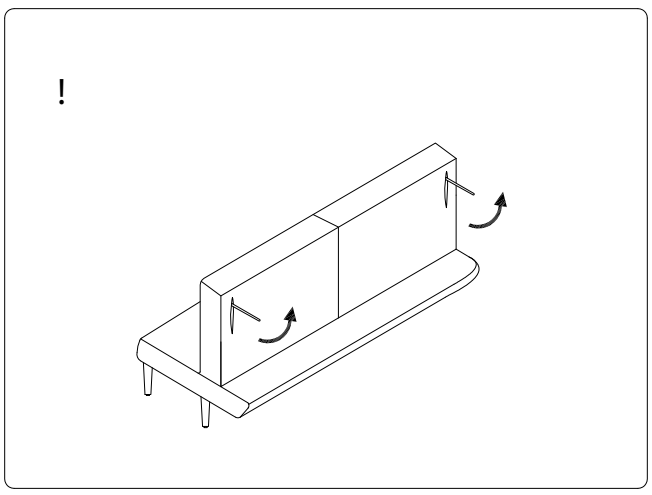

4/5

!

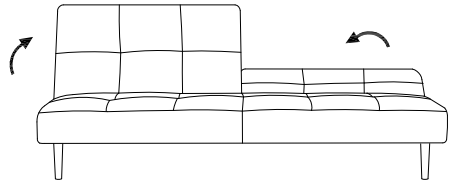

1082/SILJAN/050121/