KARLO

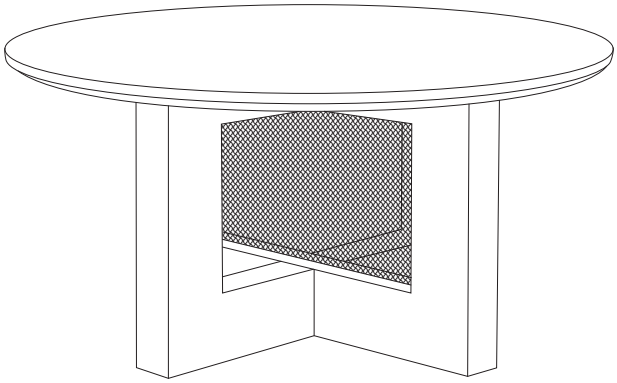

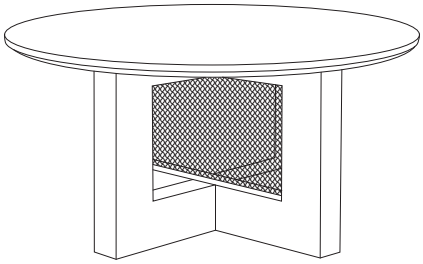

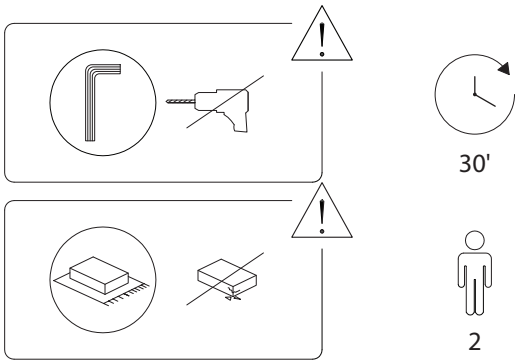

2302/KARLO/231225/

A	B	C	D
x 1	x 1	x 1	x 4



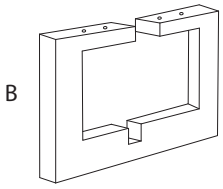

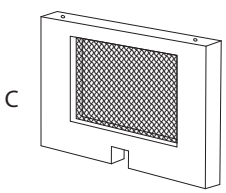

E	F	G	H	I	J
	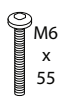 M6 x 55			 M6 x 16	
x 4	x 4	x 1	x 4	x 4	x 1

2302/KARLO/231225/

1

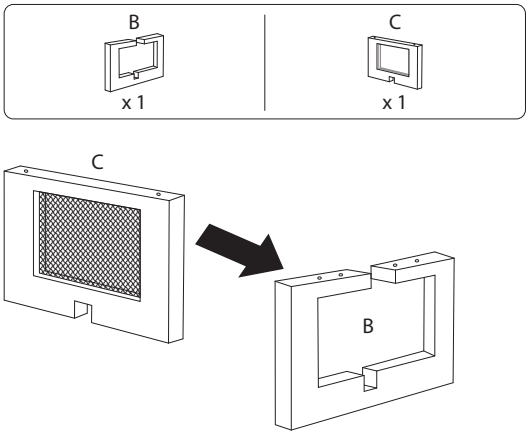

2

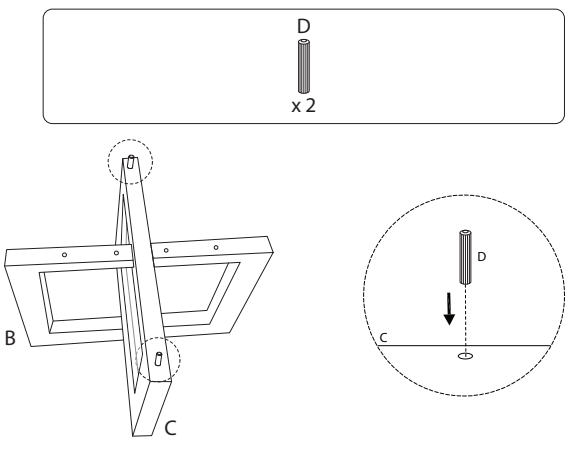

2302/KARLO/231225/

3

A	E	F	G
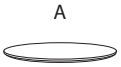			
x 1	x 4	x 4	x 1

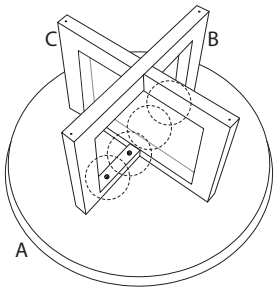

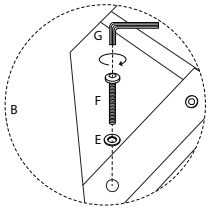

4

G	I	J
		
x 1	x 4	x 1

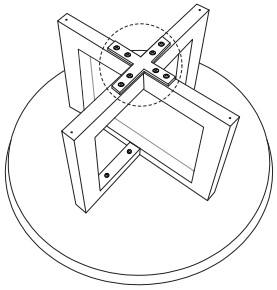

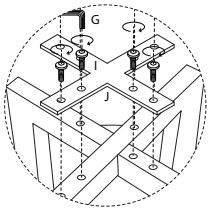

5

H

x 4

