UTTELA

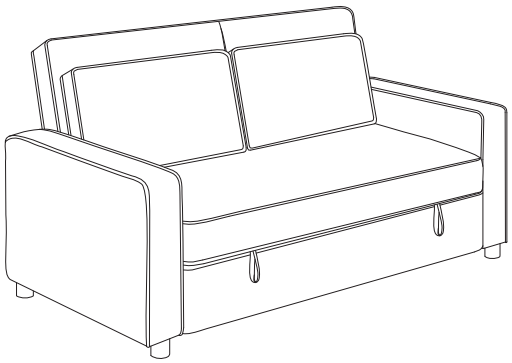

1/6

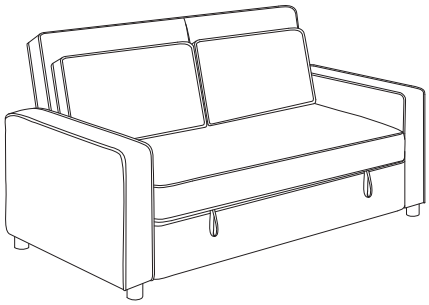

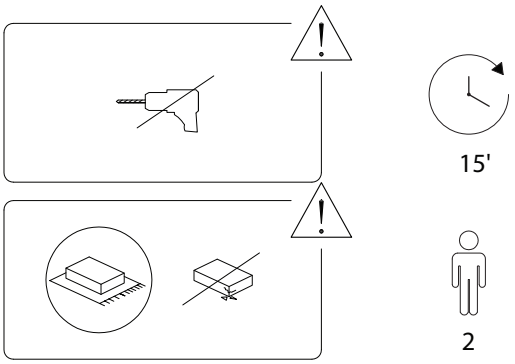

2/6

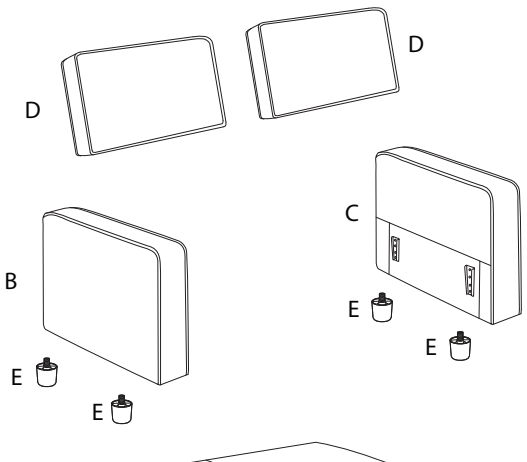

A	B	C	D	E
x 1	x 1	x 1	x 2	x 4

3/6

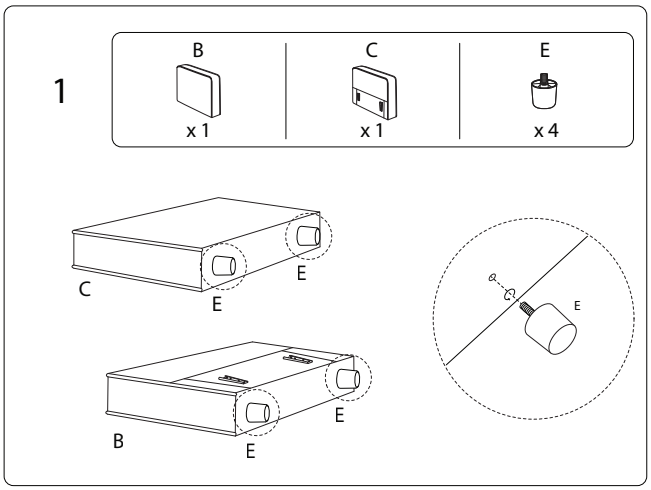

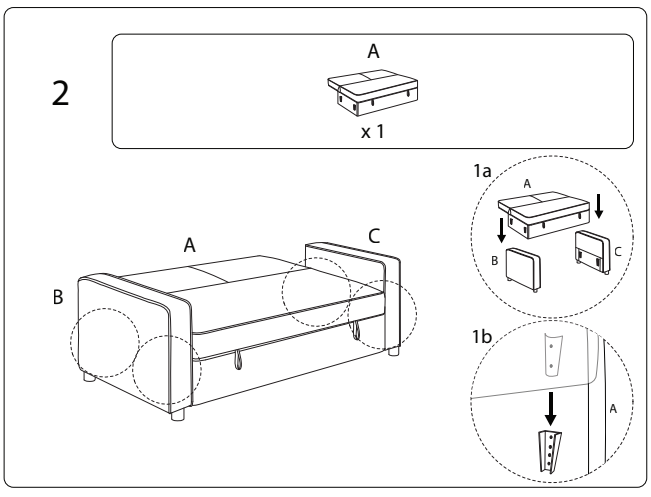

4/6

1082/UTTELA/291225/

3

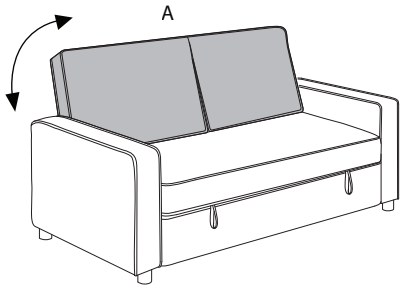

!

