

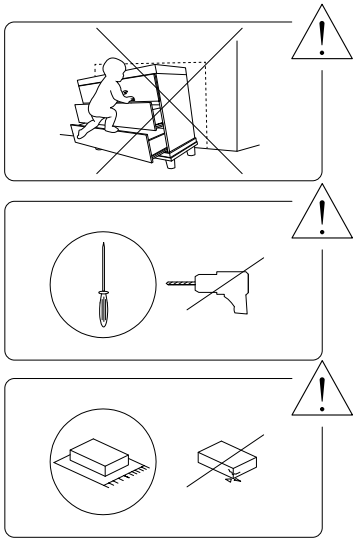

30'

1

1/11

1914/OSSET/070922/

A	B	C	D
x 1	x 1	x 1	x 1

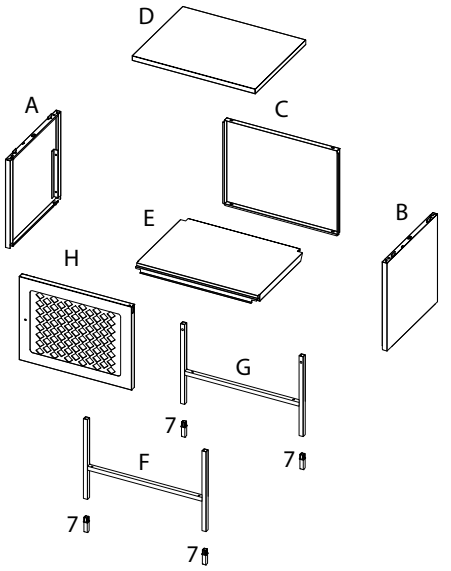

E	F	G	H
x 1	x 1	x 1	x 1

2/11

1914/OSSET/070922/

1	2	3
x 1	x 8	M4 x 25 x 1
4	5	6
x 4	x 1	x 1
7	8	9a
x 4	x 1	x 1
9b	10	11
x 2	M4.2 x 32 x 2	x 2
	12	
	M4 x 10 x 2	

3/11

1914/OSSET/070922/

1

F	G	7
x 1	x 1	x 4

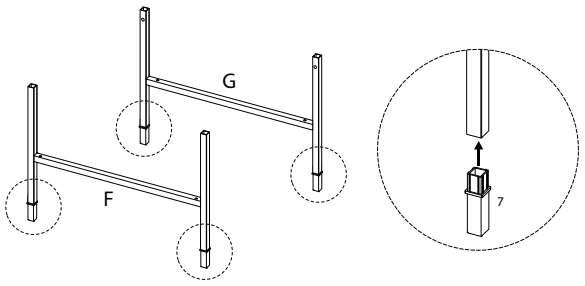

2

4
x 4

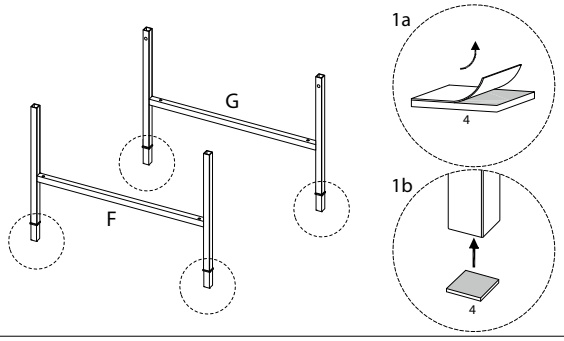

4/11

1914/OSSET/070922/

3

B

x 1

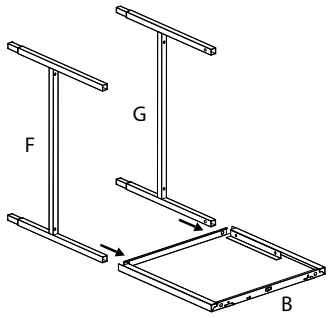

4

A

x 1

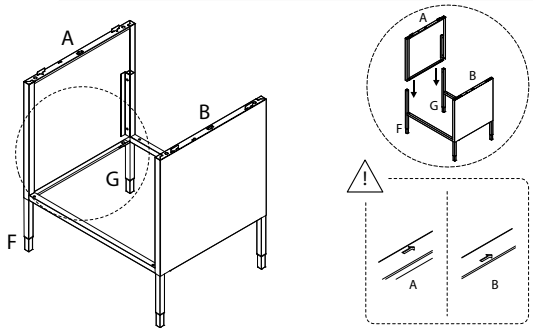

5/11

1914/OSSET/070922/

5

2

x 4

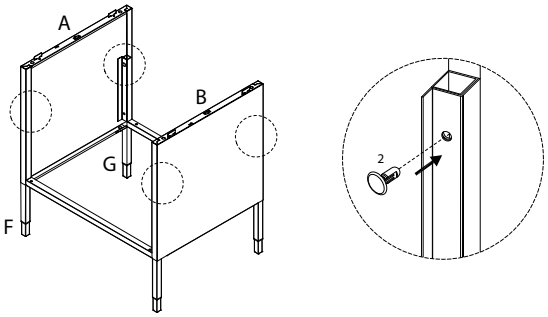

6

C

x 1

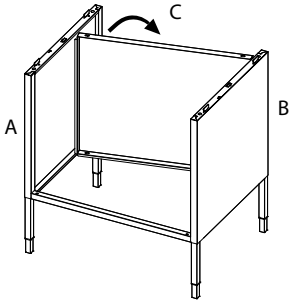

6/11

1914/OSSET/070922/

7

2

x 2

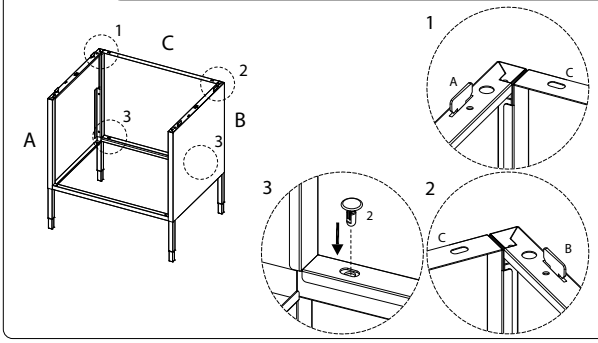

8

E

x 1

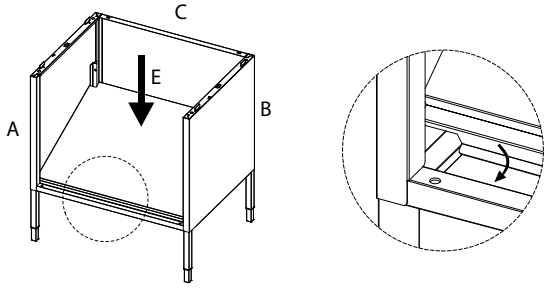

7/11

1914/OSSET/070922/

9

D

x 1

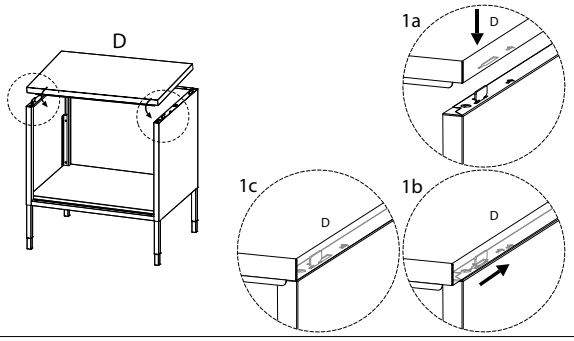

10

2

x 2

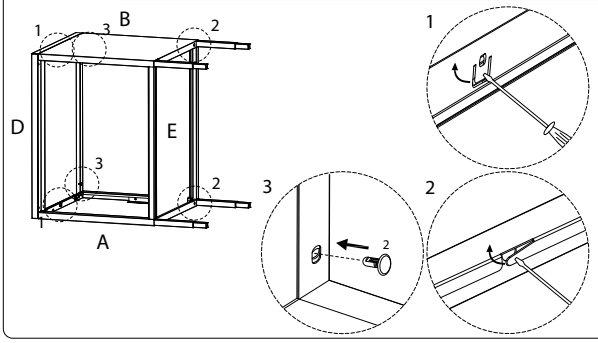

8/11

1914/OSSET/070922/

11

1	5
x 1	x 1

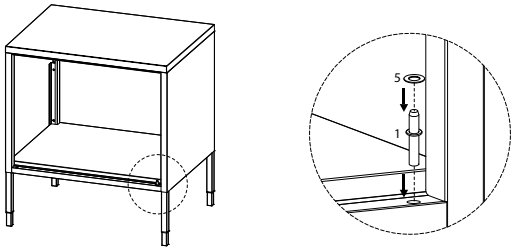

12

H
x 1

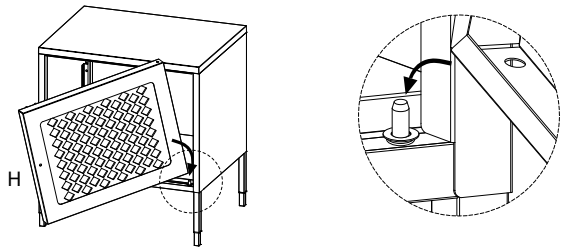

13

3	6
M4 x 25	
x 1	x 1

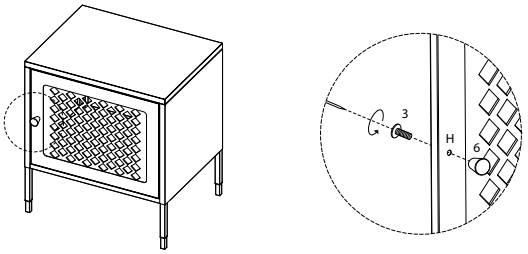

14

9b	12
	M4 x 10
x 1	x 2

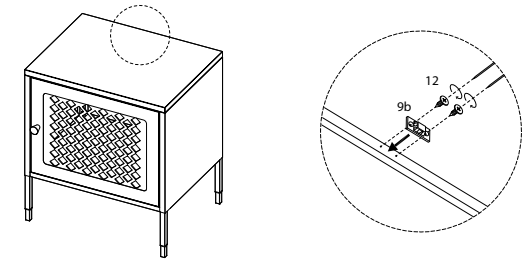

15

9a	9b	10	11
		M4.2 x 32	
x 1	x 1	x 2	x 2

