SNYDER

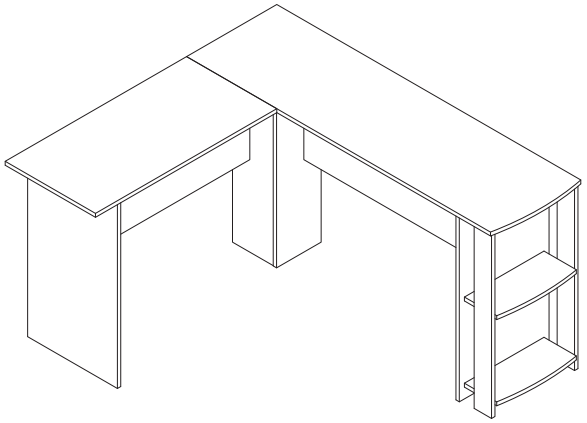

1/13

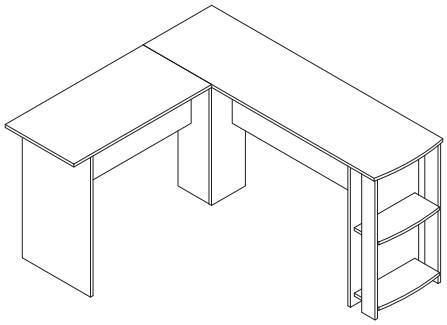

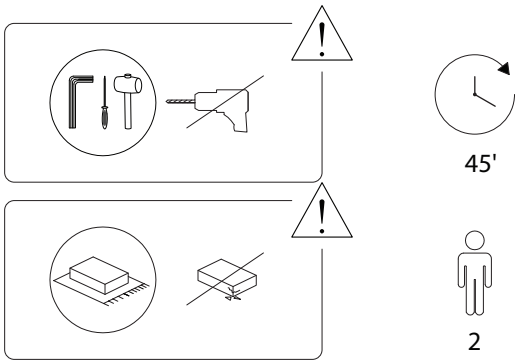

2/13

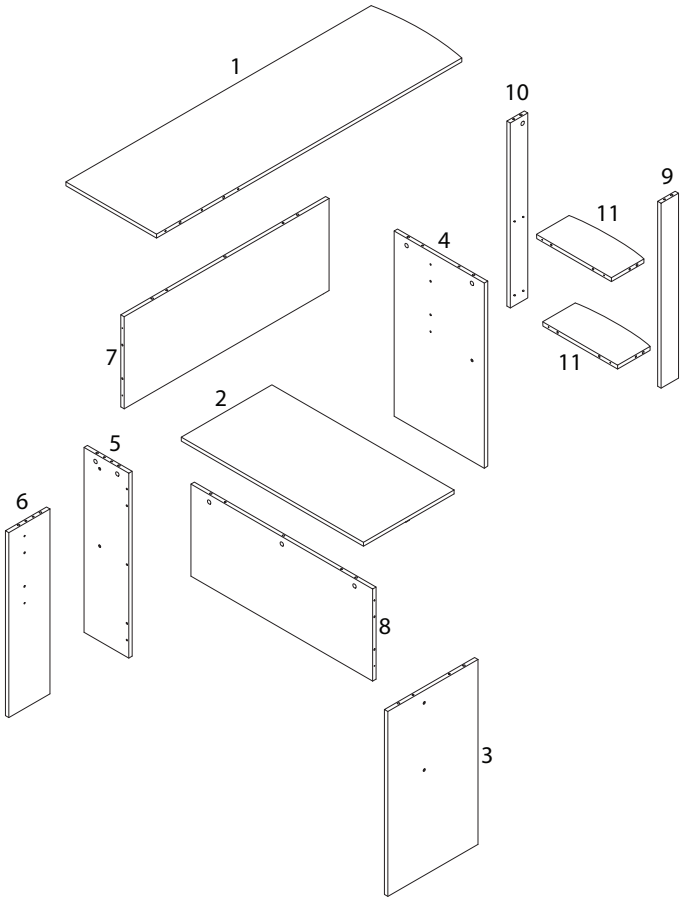

3/13

1 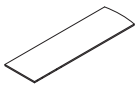 x 1	2 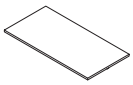 x 1	3  x 1	4  x 1
5  x 1	6  x 1	7  x 1	8 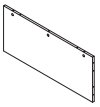 x 1
9  x 1	10  x 1	11 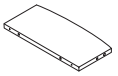 x 2	A  x 26
B  x 26	C  x 12	D  x 32	E  x 2
F  x 8	G  x 31	H  x 2	I  x 8

4/13

2788/SNYDER/270726/

1

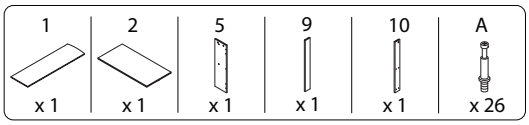

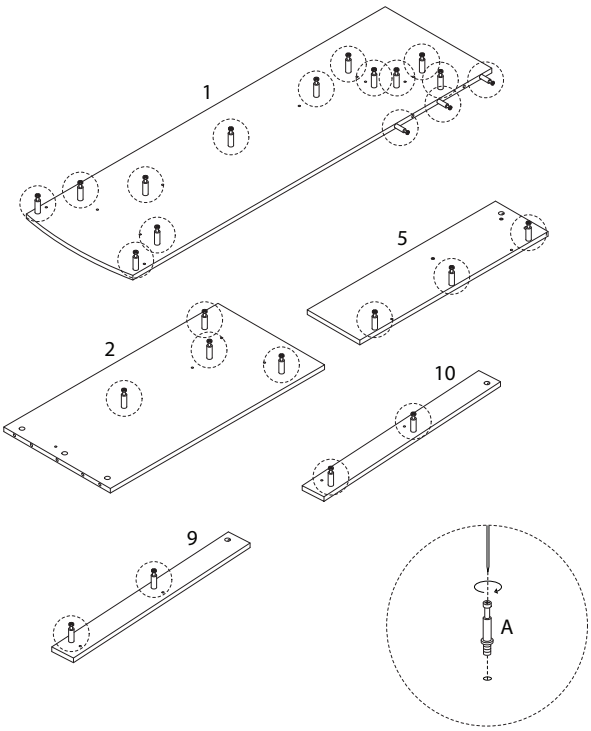

5/13

2 x 2

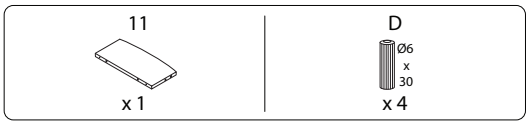

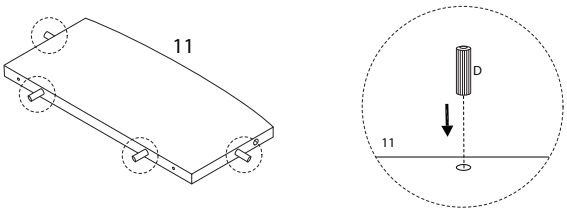

3

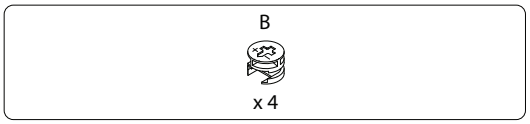

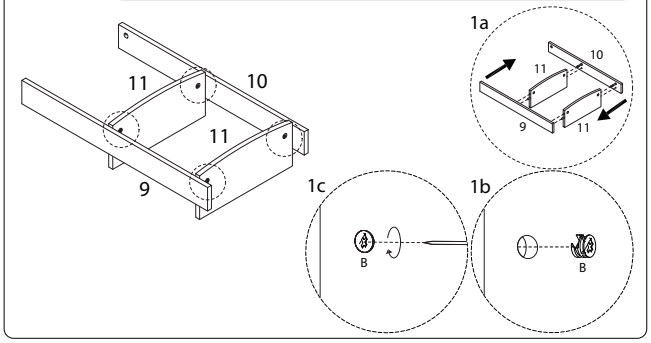

6/13

4

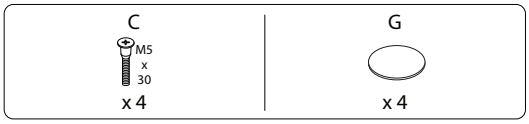

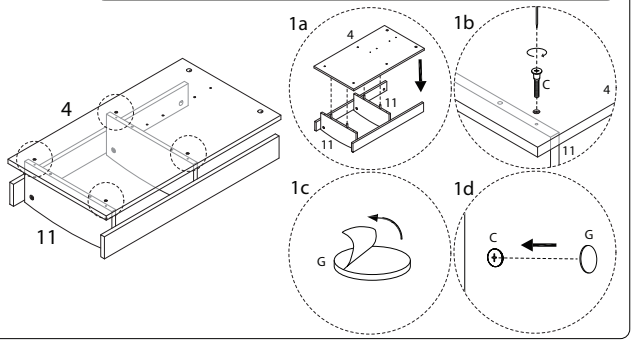

5

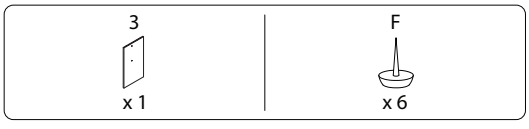

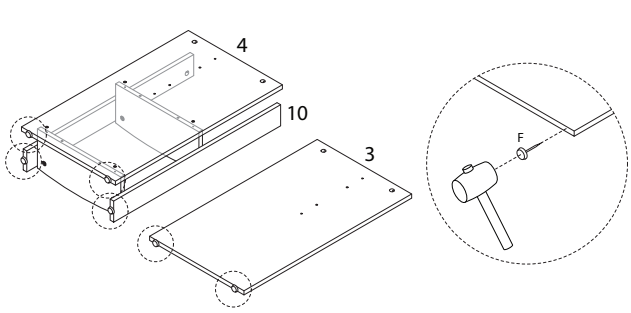

7/13

6

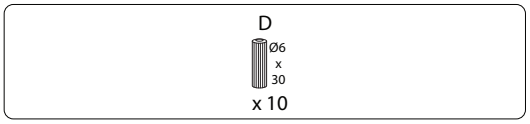

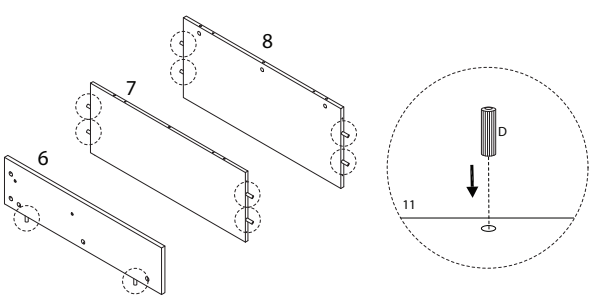

7

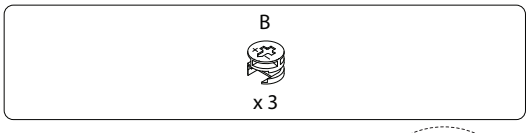

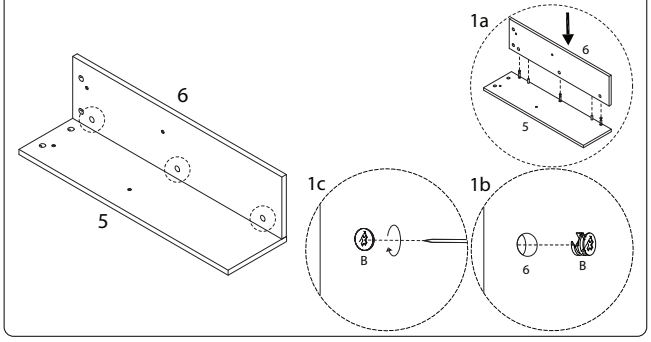

8/13

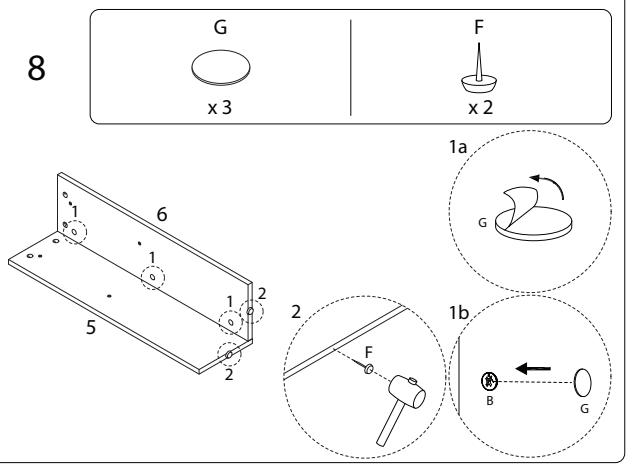
8
G
x 3
F
x 2
1a
1b
2
1
2
5
6
F
B
G

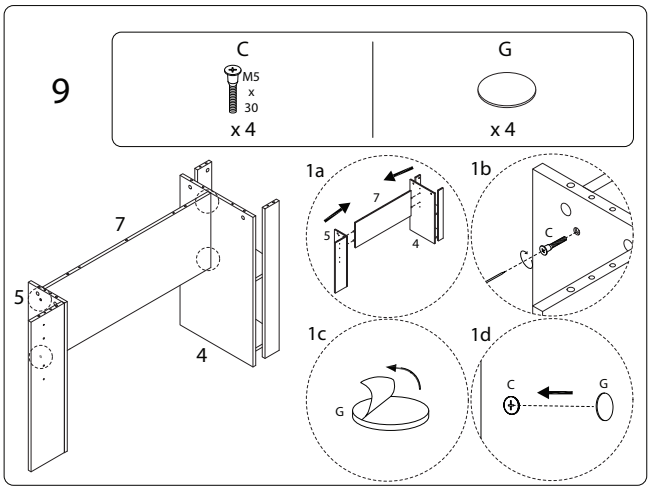
9
C
M5
x
30
x 4
G
x 4
1a
1b
1c
1d
7
5
4
C
G

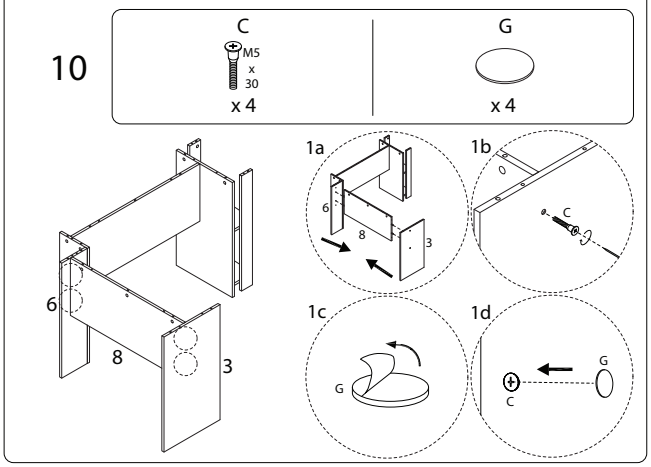
10
C
M5
x
30
x 4
G
x 4
1a
1b
1c
1d
6
8
3
C
G

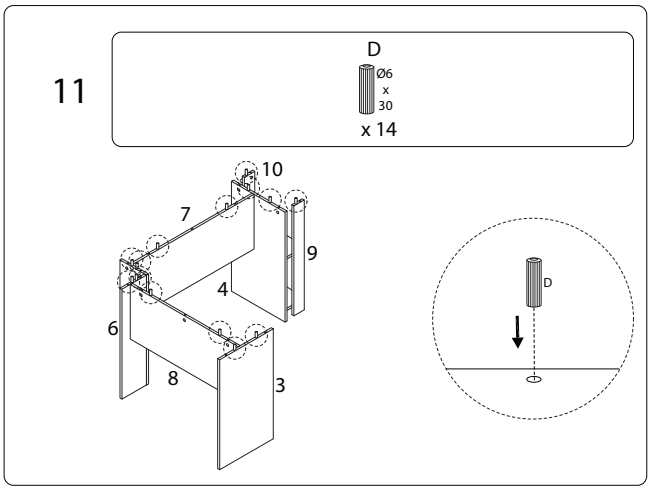
11
D
Ø6
x
30
x 14
10
7
9
4
6
8
3
D

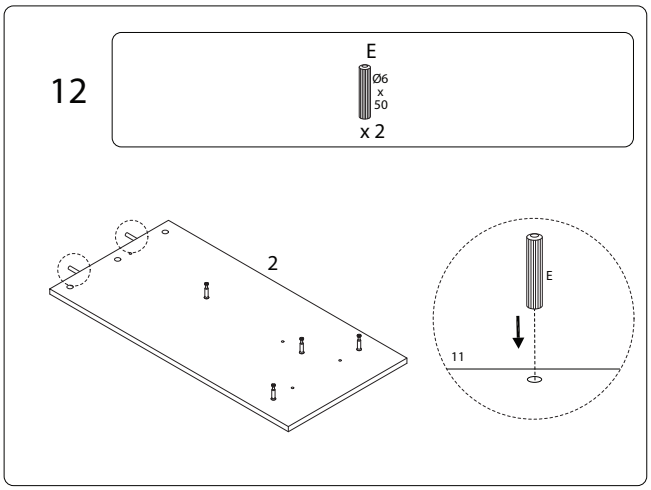
12
E
Ø6
x
50
x 2
2
E
11

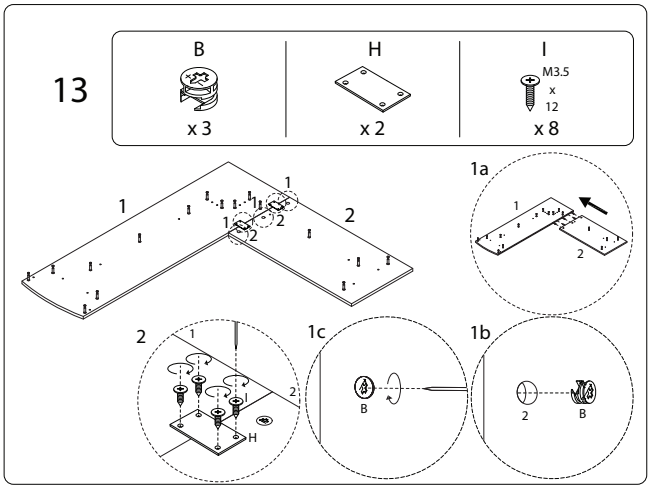
13
B
x 3
H
x 2
I
M3.5
x
12
x 8
1a
1b
1c
1
2
H
B

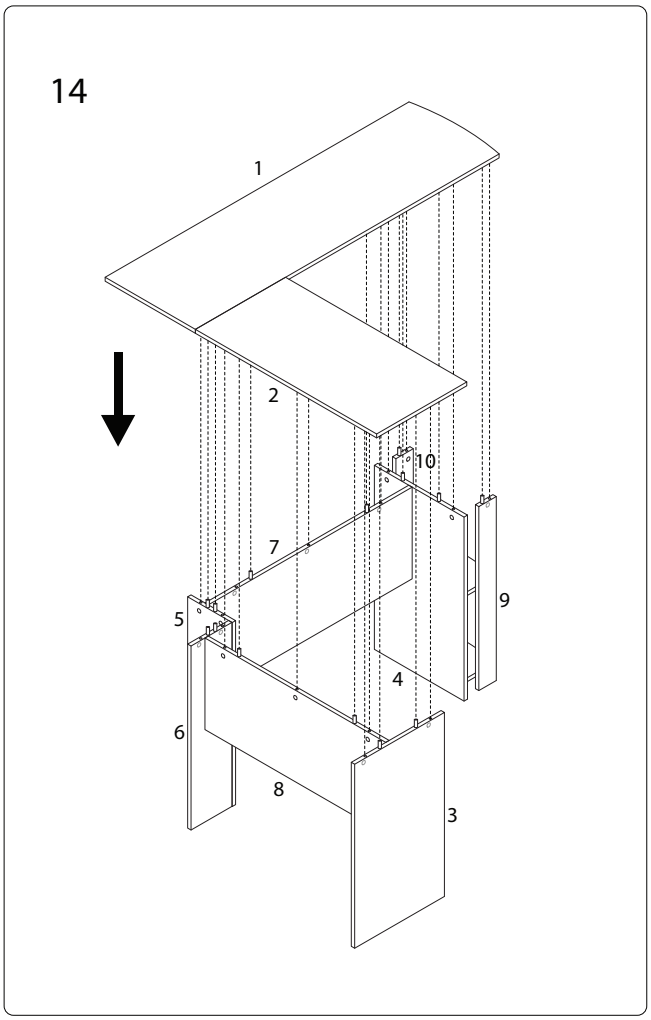
14
1
2
10
7
9
5
4
6
8
3

15

B	G
	
x 16	x 16

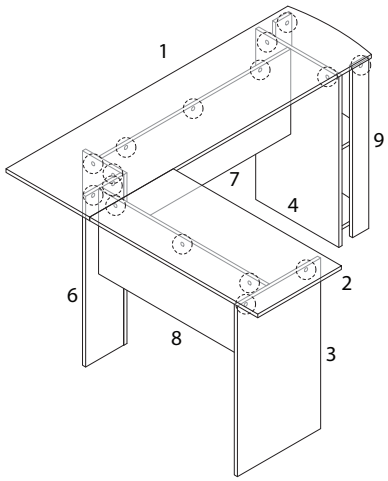

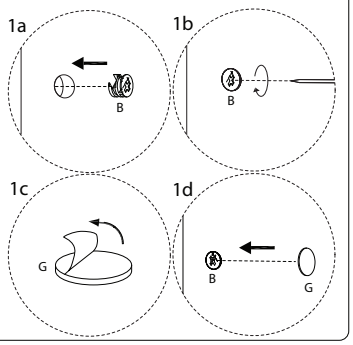

2788/SNYDER/270726/