BURRA

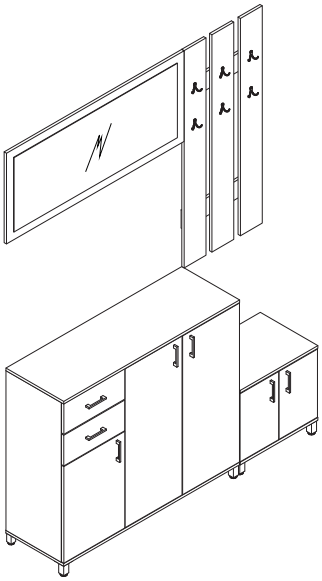

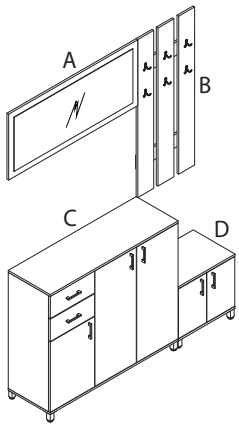

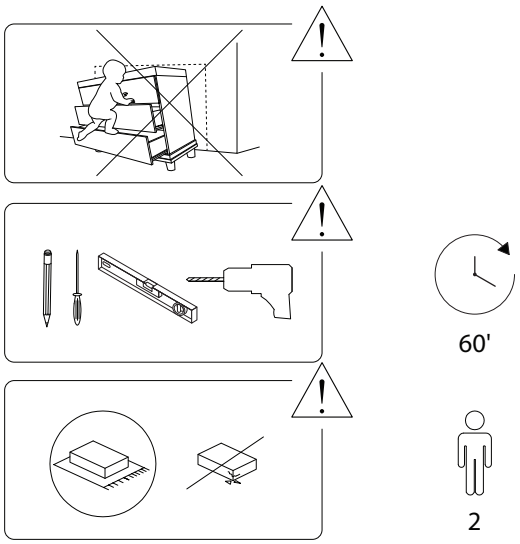

A

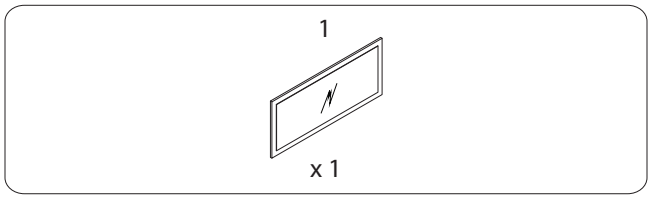

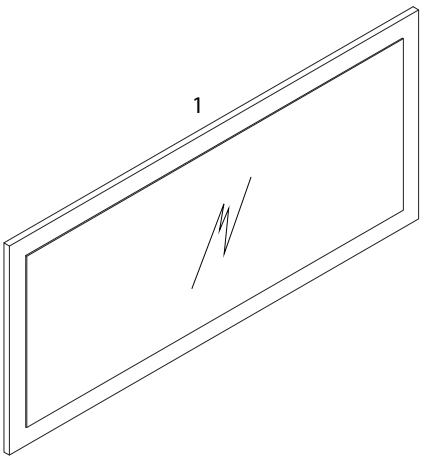

D	O	R	S	W
M3.5 x 14			M4 x 50	
x 12	x 6	x 12	x 12	x 1

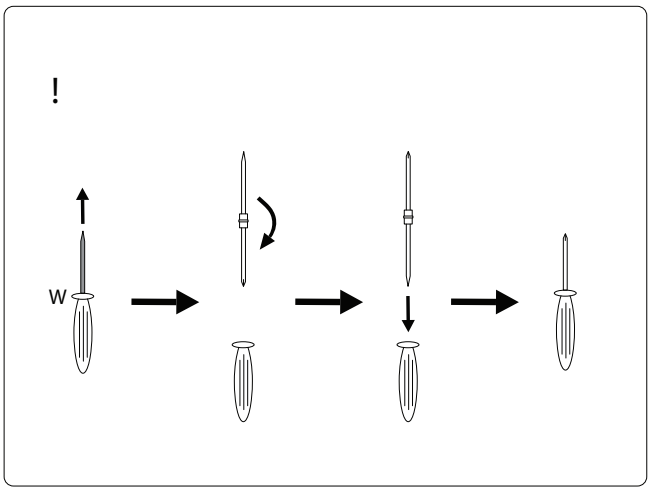

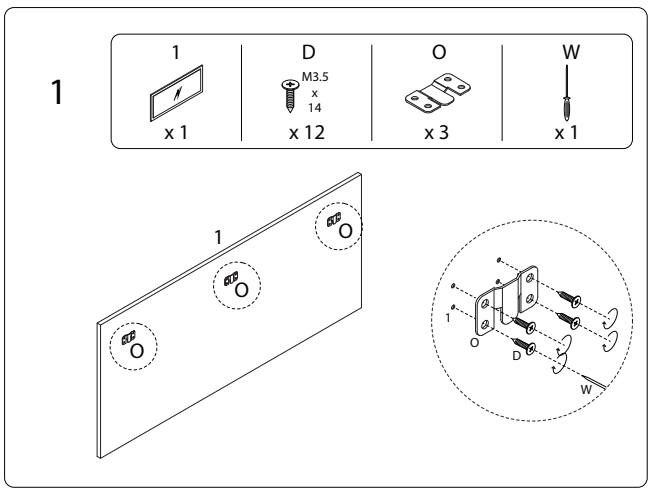

2

O	R	S	W
x 3	x 12	M4 x 50 x 12	x 1

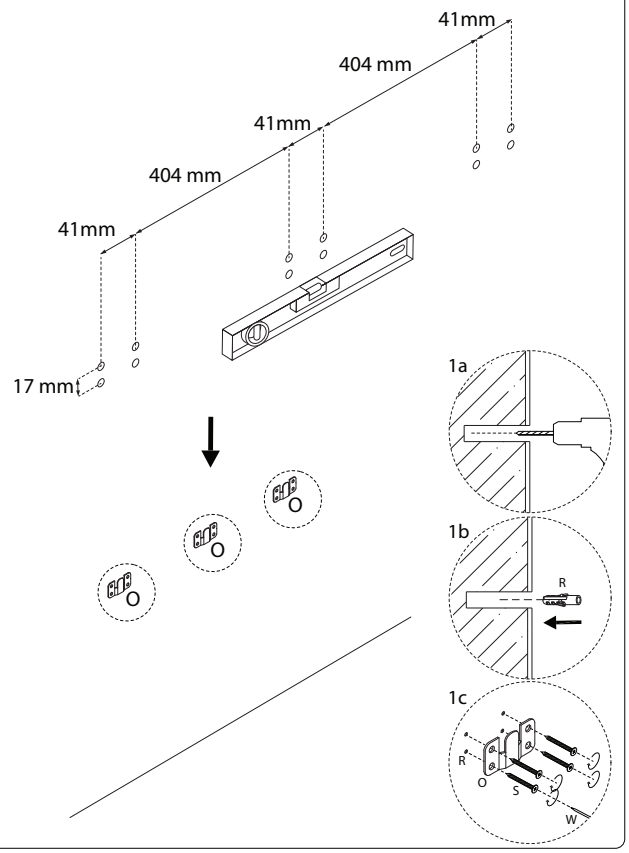

3

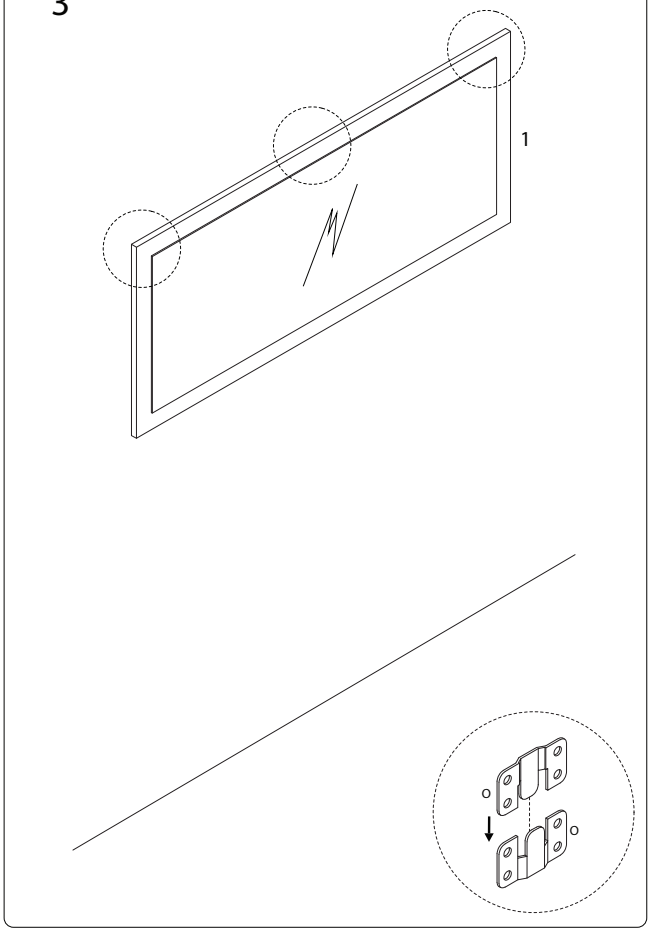

B

2	3	4
x 3	x 1	x 1

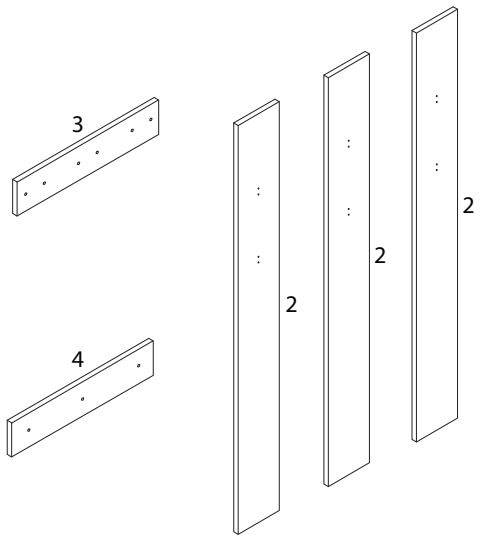

D	F	G	O	R	S	W
M3.5 x 14	M6 x 20				M4 x 50	
x 20	x 9	x 6	x 4	x 8	x 8	x 1

1 x 3

2	D	G	W
x 1	M3.5 x 14 x 4	x 2	x 1

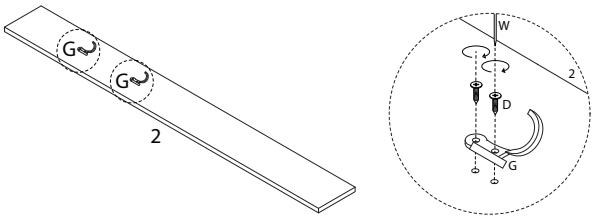

2

3	4	D	F	O	W
x 1	x 1	M3.5 x 14 x 8	M6 x 20 x 9	x 2	x 1

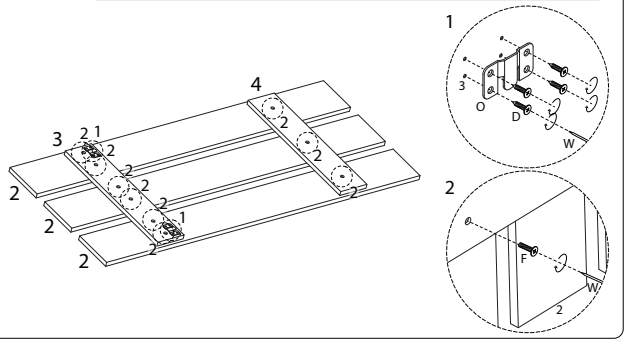

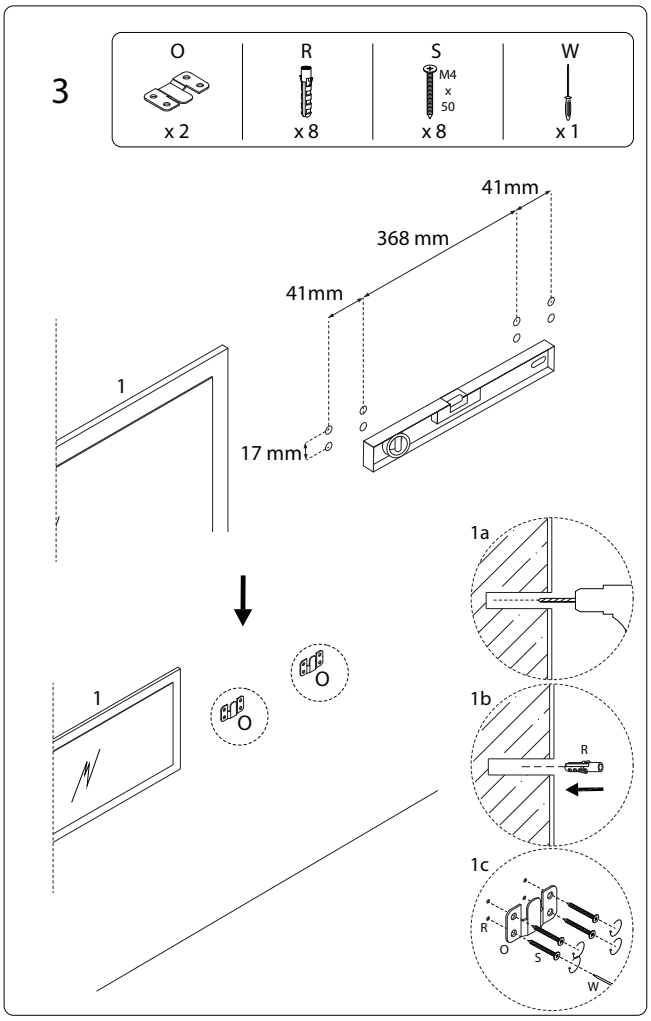
3
O
x 2
R
x 8
S
M4
x
50
x 8
W
x 1
41mm
368 mm
41mm
1
17 mm
1a
1b
1c
1
O
O
R
R
O
S
W

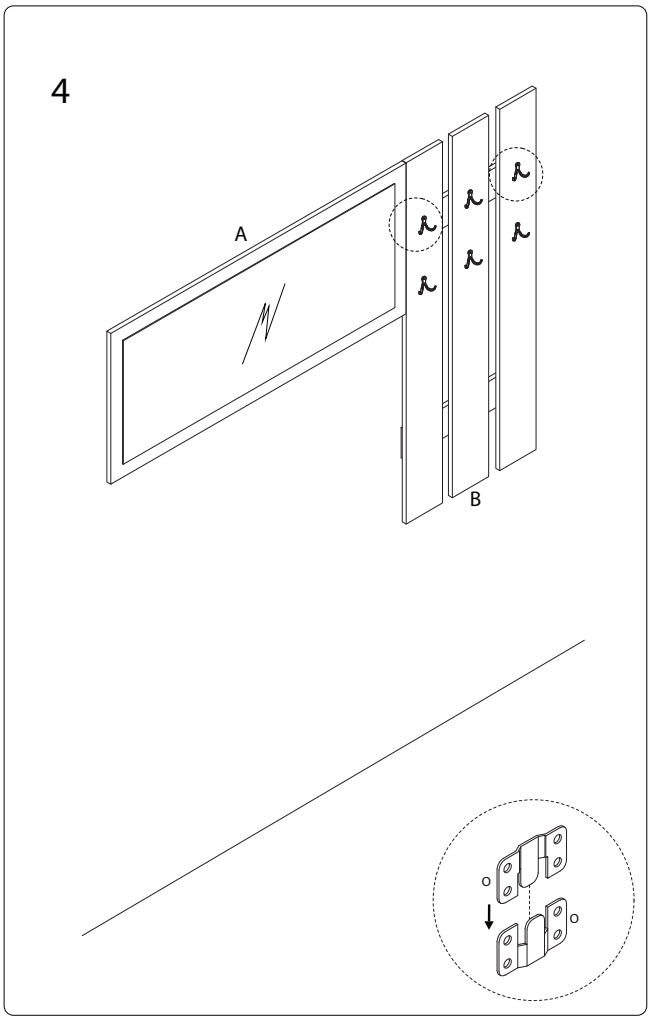
4
A
B
O
O

C

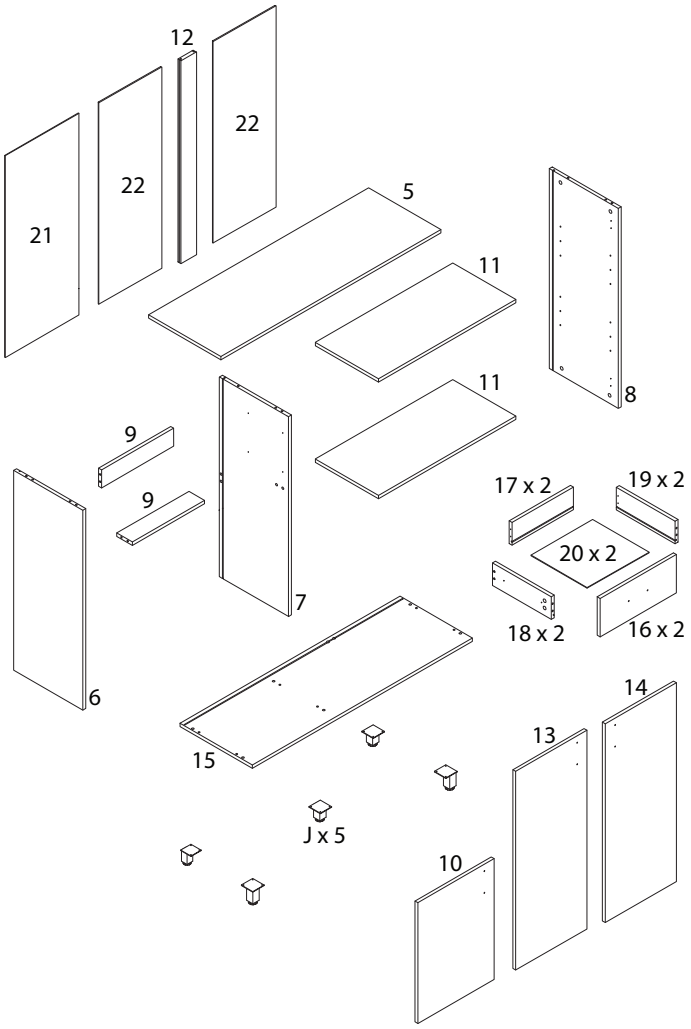
12
22
22
21
5
11
8
11
9
9
17 x 2
19 x 2
20 x 2
7
18 x 2
16 x 2
6
14
13
15
J x 5
10

C

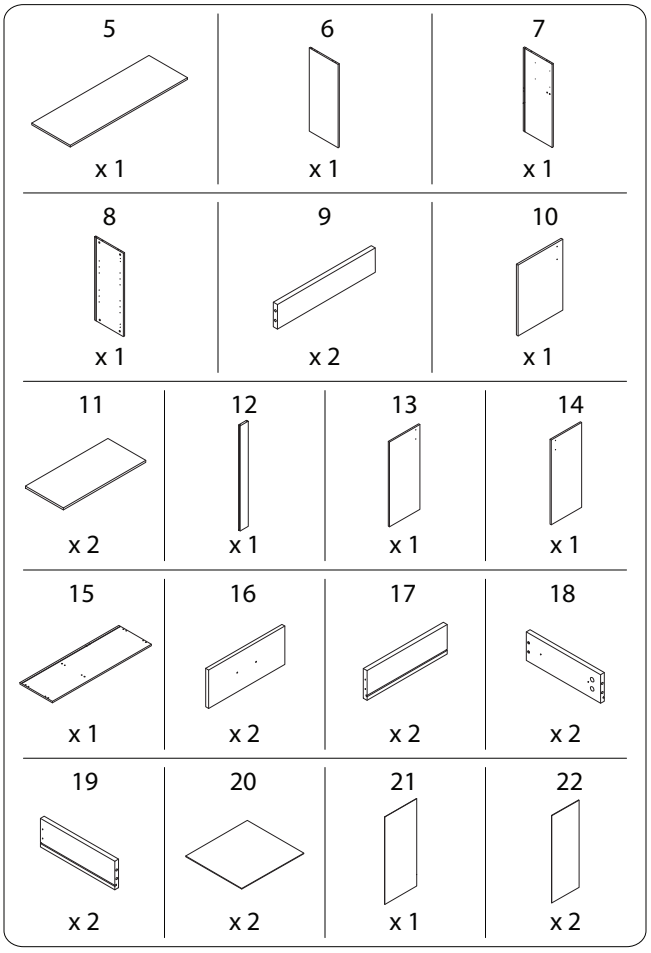
5
x 1
6
x 1
7
x 1
8
x 1
9
x 2
10
x 1
11
x 2
12
x 1
13
x 1
14
x 1
15
x 1
16
x 2
17
x 2
18
x 2
19
x 2
20
x 2
21
x 1
22
x 2

C

A	B	C
x 32	x 32	x 12
D	**E**	**H**
M3.5 x 14	M3.5 x 35	
x 69	x 8	x 2
I	**J**	**K**	**L**
			M4 x 18
x 4	x 5	x 5	x 10
M	**N1**	**N2**	**P**
x 1	x 4	x 4	x 8
Q	**T**	**U**	**W**
		M3 x 12	
x 32	x 12	x 12	x 1

1

5	A	D	M	W
x 1	x 8	M3.5 x 14 x 2	x 1	x 1

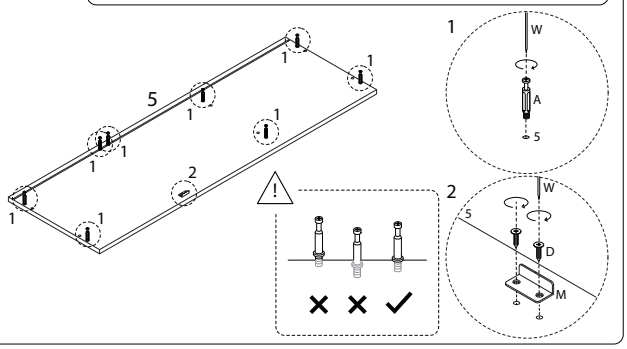

2 x 2

16	A	K	L	W
x 1	x 4	x 1	M4 x 18 x 2	x 1

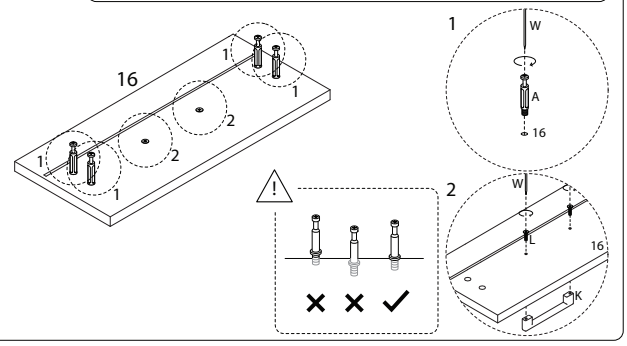

3

6	7	A	D	N1	W
x 1	x 1	x 8	M3.5 x 14 x 8	x 4	x 1

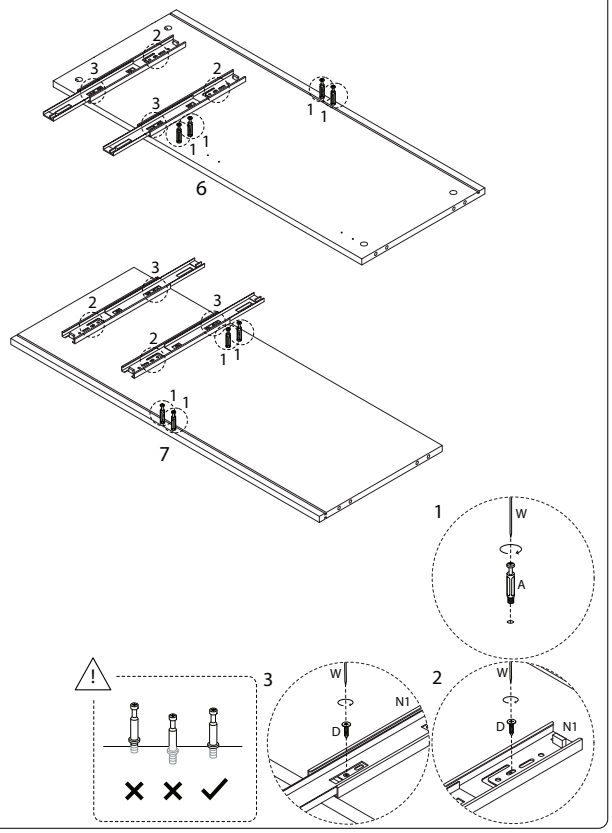

4

15	A	D	J	W
x 1	x 8	M3.5 x 14 x 15	x 5	x 1

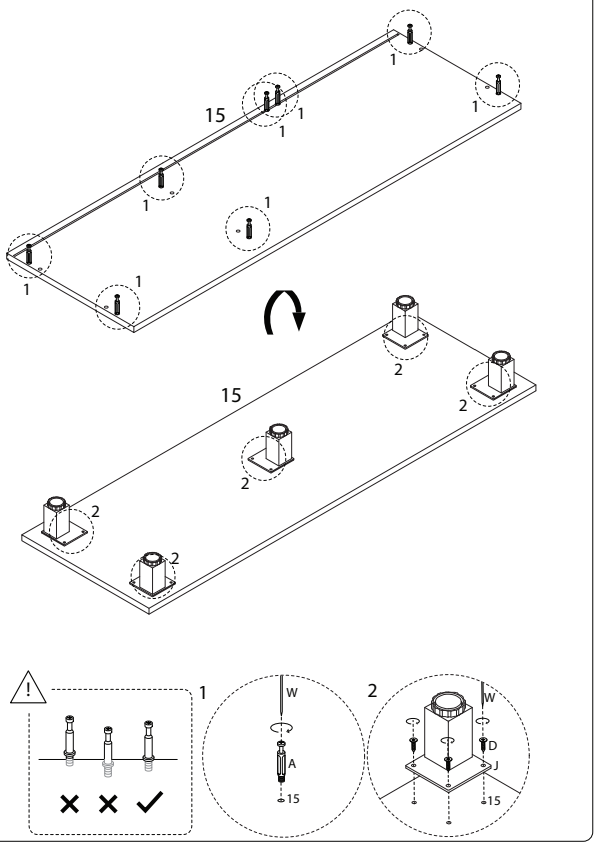

5

10	13	14	D
x 1	x 1	x 1	M3.5 x 14 x 12

H	I	K	L	W
x 2	x 4	x 3	M4 x 18 x 6	x 1

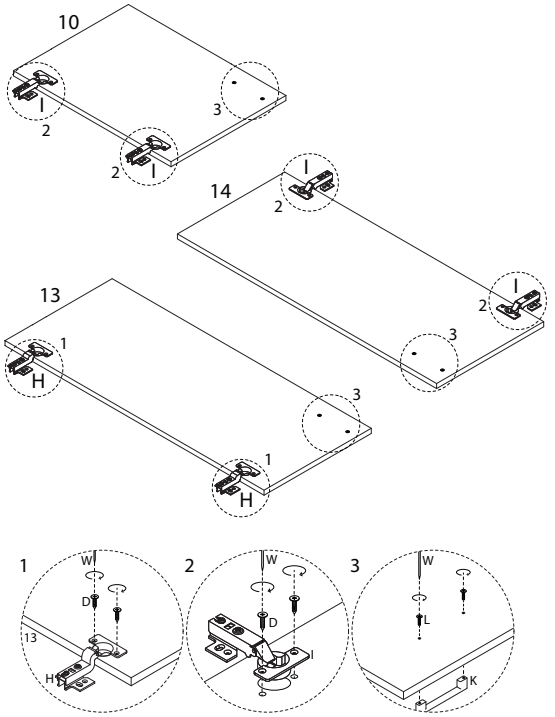

6

9	B	W
x 2	x 4	x 1

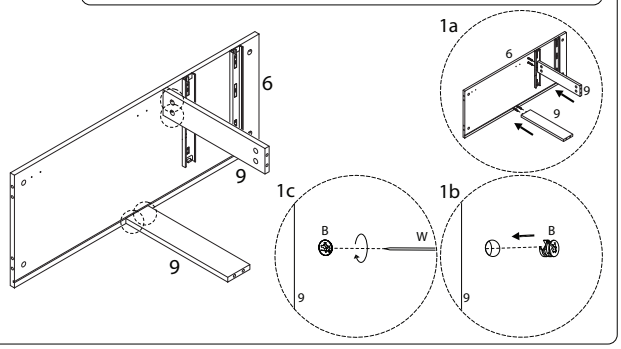

7

B	W
x 4	x 1

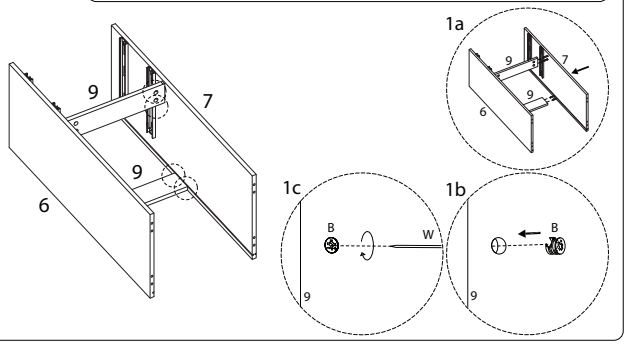

8

8	C
x 1	x 12

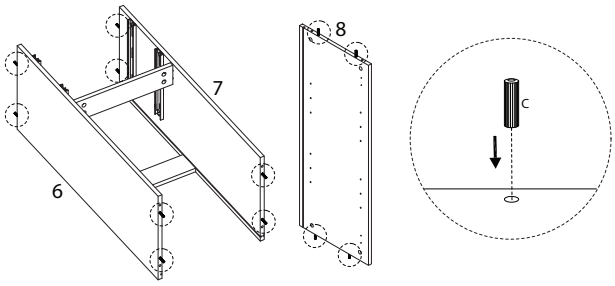

10

12	B	W
x 1	x 4	x 1

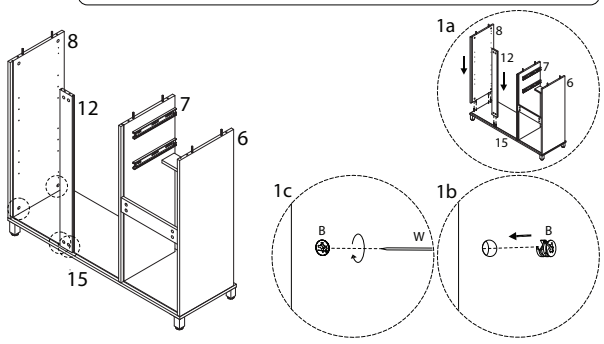

9

B	W
x 4	x 1

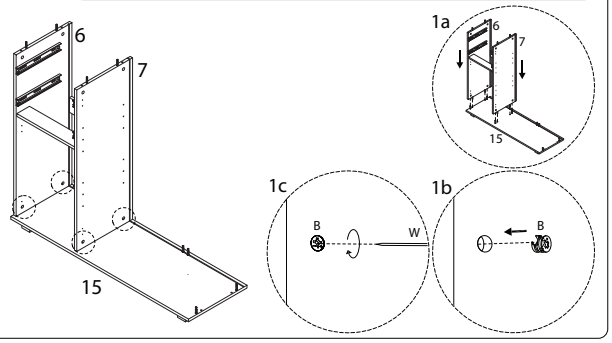

11

21	22
x 1	x 2

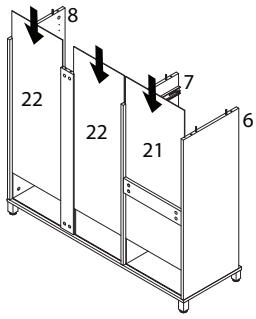

12

B	W
x 8	x 1

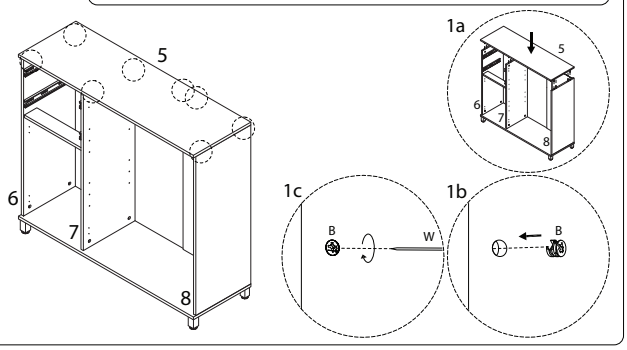

13

D	W
M3.5 x 14 x 24	x 1

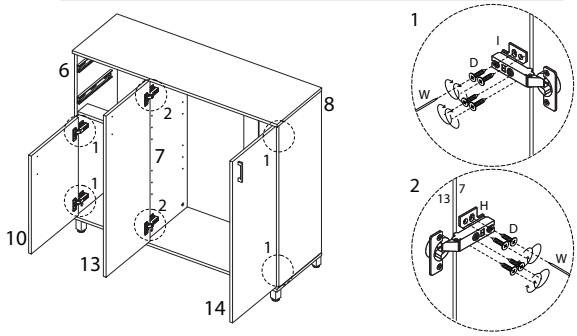

14

P
x 8

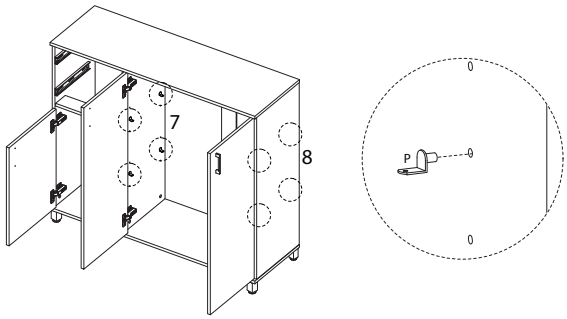

15

11
x 2

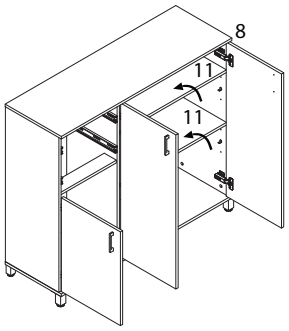

16 x 2

17	18	19	E	W
x 1	x 1	x 1	M3.5 x 35 x 4	x 1

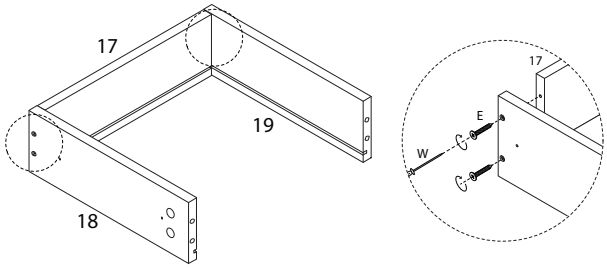

17 x 2

20
x 1

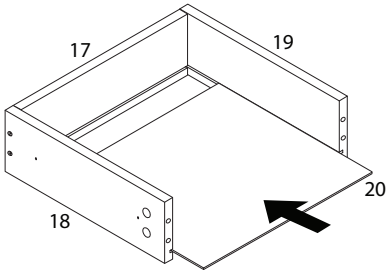

18 x 2

B	W
x 4	x 1

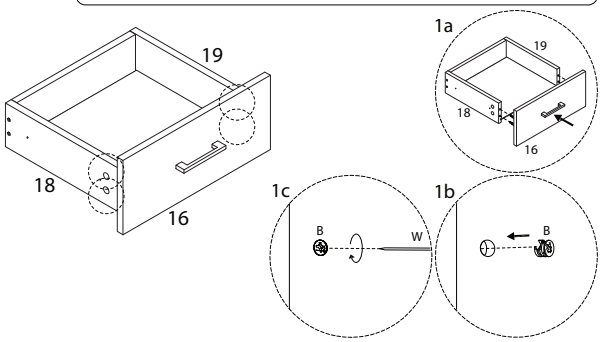

19 x 2

D	N2	W
M3.5 x 14 x 4	x 2	x 1

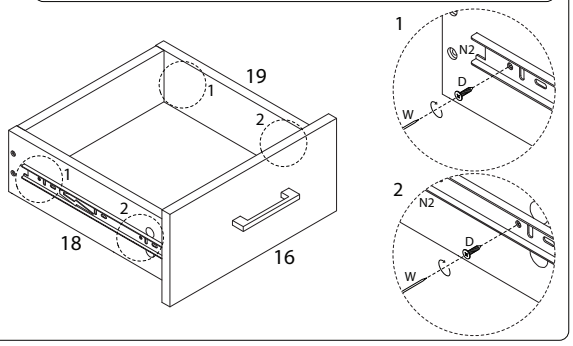

20

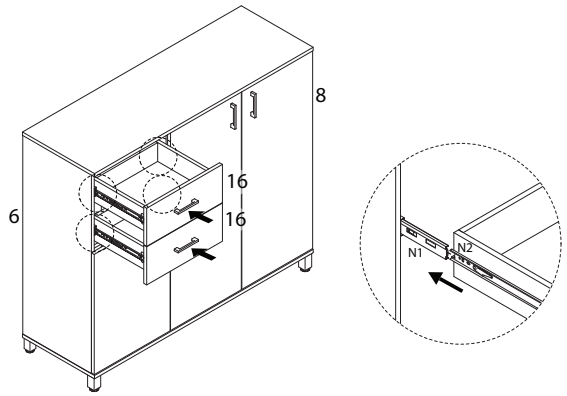

21

T	U	W
x 12	M3 x 12 x 12	x 1

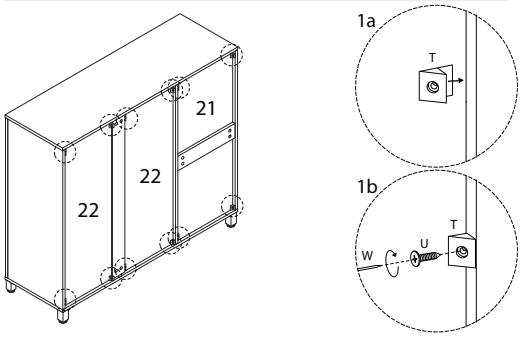

22

Q
x 32

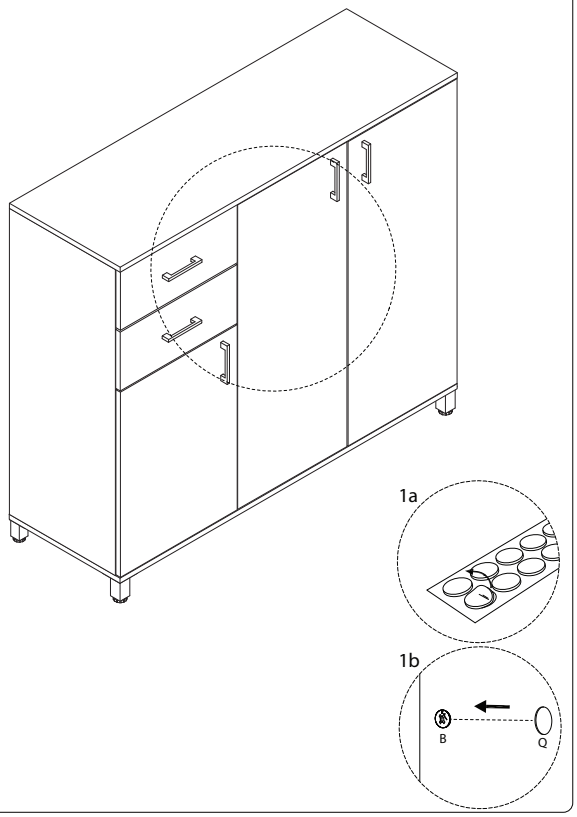

D

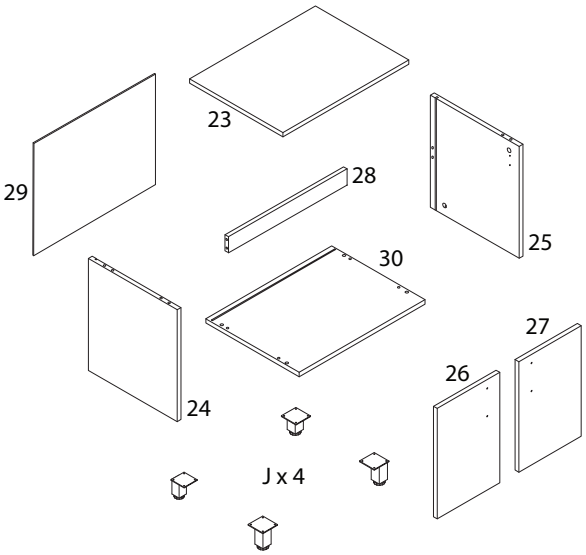

23	24	25	26
x 1	x 1	x 1	x 1
27	**28**	**29**	**30**
x 1	x 1	x 1	x 1

D

A	B
x 12	x 12
C	**D**
x 8	M3.5 x 14 x 38
I	**J**	**K**
x 4	x 4	x 2
L	**M**	**Q**
M4 x 18 x 4	x 1	x 12
T	**U**	**W**
x 4	M3 x 12 x 4	x 1

1

23	24	25	30	A	D	M	W
x 1	x 1	x 1	x 1	x 12	M3.5 x 14 x 2	x 1	x 1

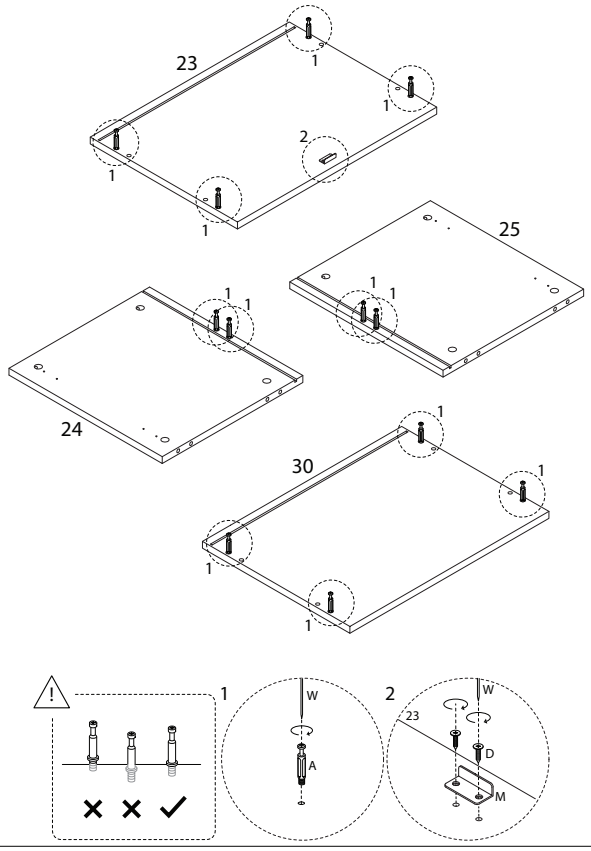

2

D	J	W
M3.5 x 14 x 12	x 4	x 1

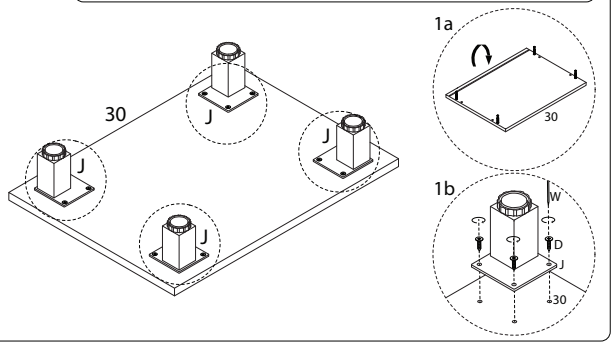

3

26	27	D	I	W
x 1	x 1	M3.5 x 14 x 8	x 4	x 1

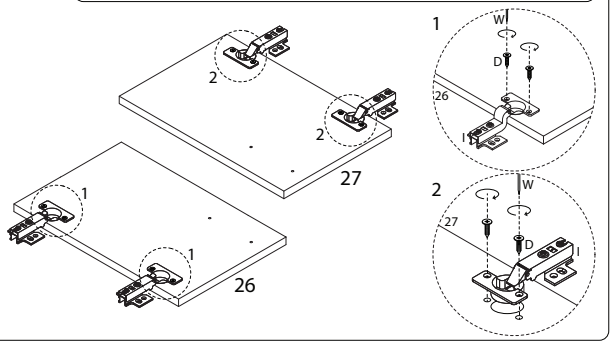

4

K	L	W
x 2	M4 x 18 x 4	x 1

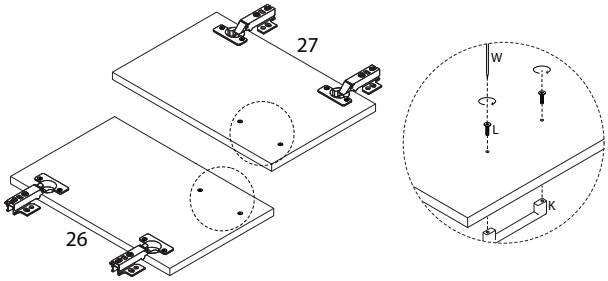

6

C
x 8

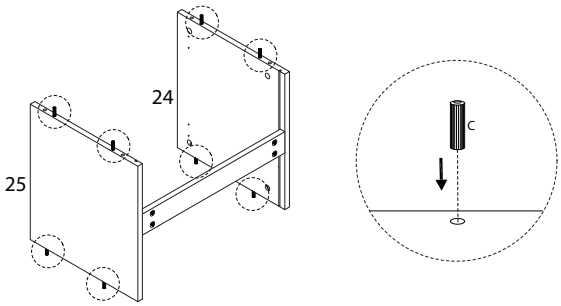

5

28	B	W
x 1	x 4	x 1

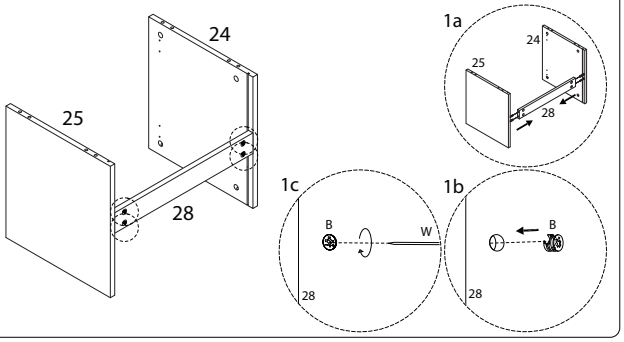

7

B	W
x 4	x 1

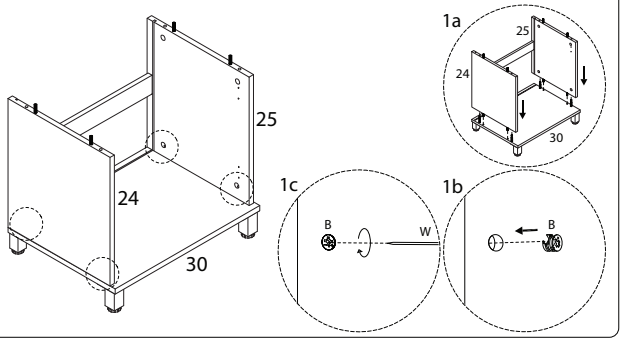

8

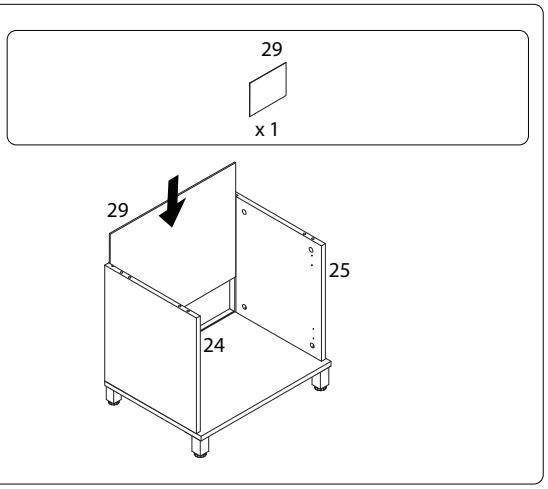
29
x 1
29
25
24

9

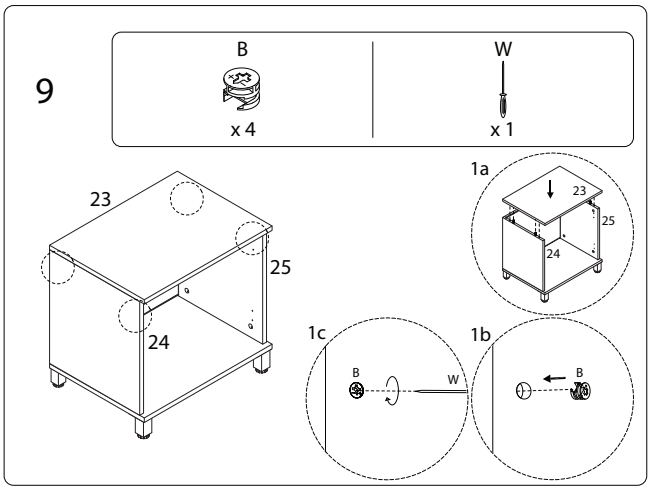
B
x 4
W
x 1
23
25
24
1a
23
25
24
1c
B
W
1b
B

10

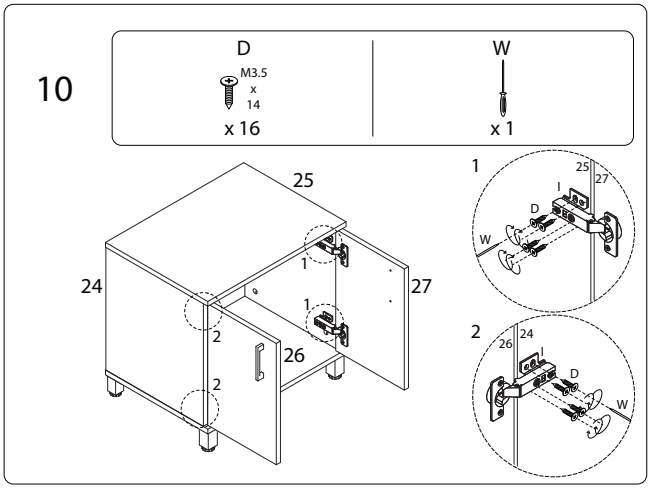
D
M3.5
x
14
x 16
W
x 1
25
24
27
26
1
2
1
2
1
25
27
I
D
W
2
24
26
I
D
W

11

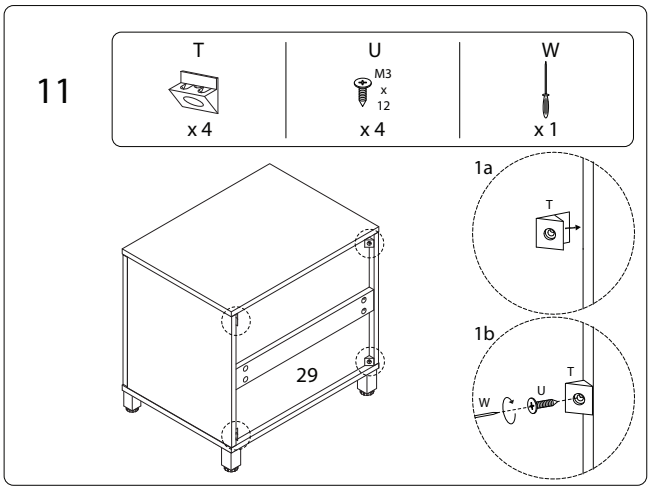
T
x 4
U
M3
x
12
x 4
W
x 1
29
1a
T
1b
W
U
T

12

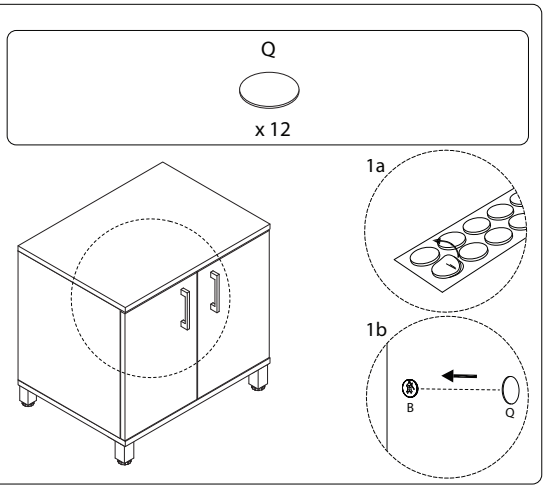
Q
x 12
1a
1b
B
Q

13

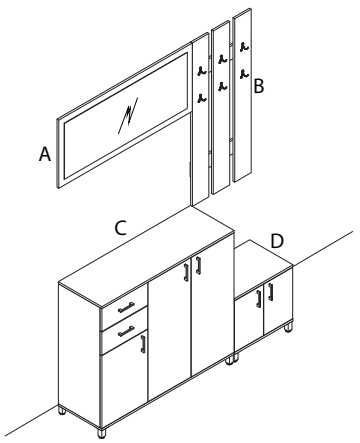
A
B
C
D

!

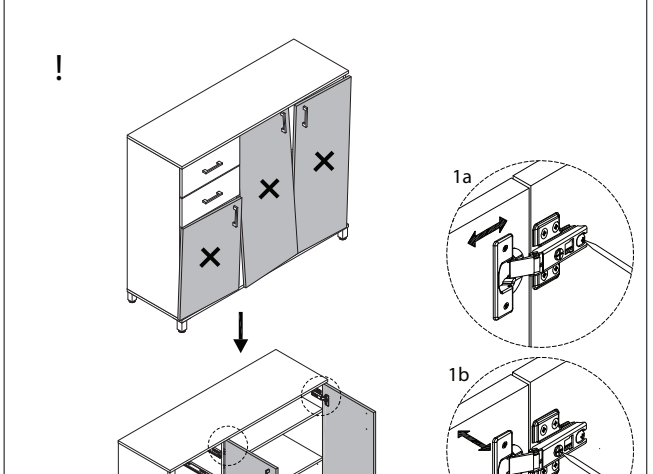
1a
1b
1c

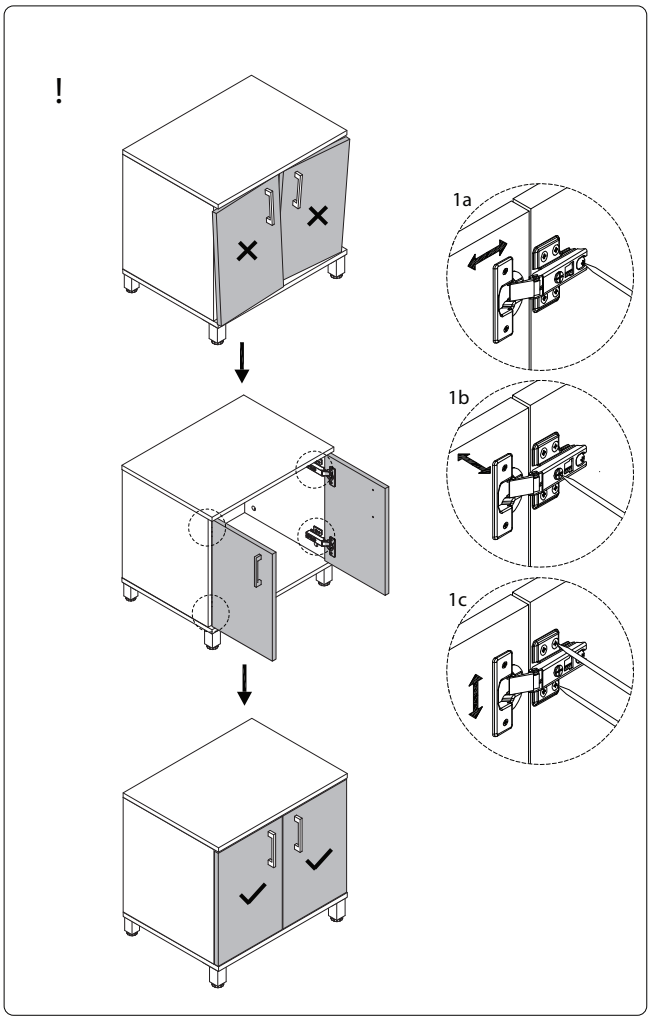

2754/BURRA/270726/