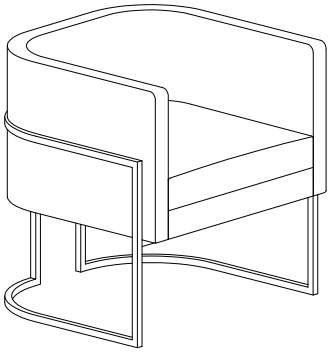

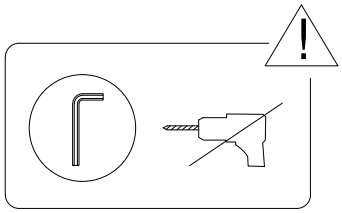

20'

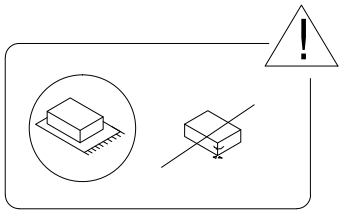

1

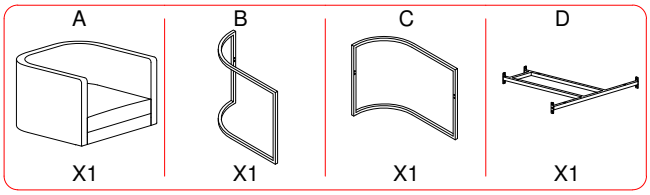
A
X1
B
X1
C
X1
D
X1

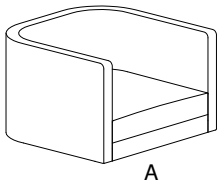
A

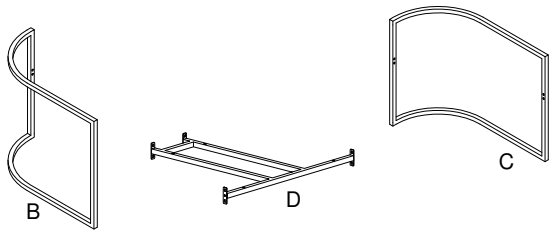
B
D
C

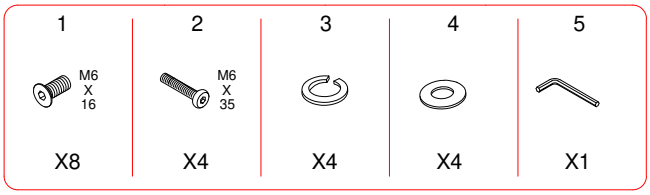
1
M6
X
16
X8
2
M6
X
35
X4
3
X4
4
X4
5
X1

1

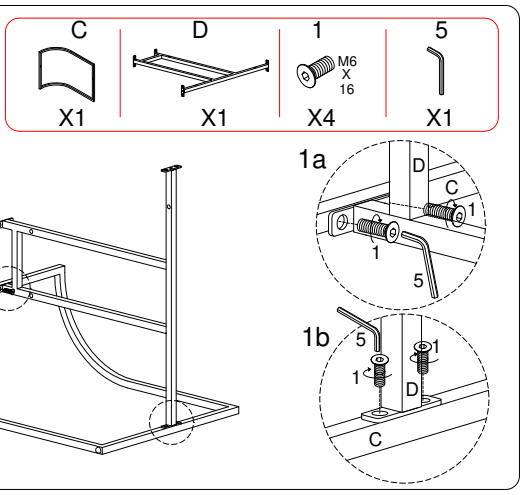
C
X1
D
X1
1
M6
X
16
X4
5
X1

1a
D
C
1
1
5
1b
5
1
1
D
C

2

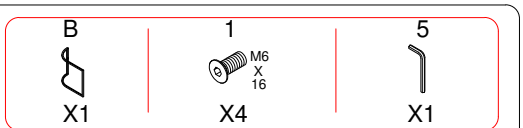
B
X1
1
M6
X
16
X4
5
X1

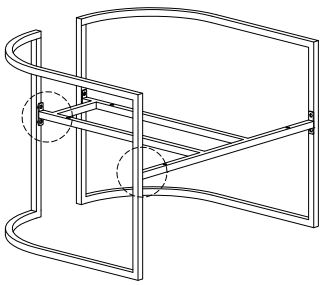

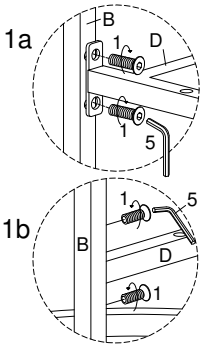
1a
B
1
D
1
5
1b
1
5
B
D
1

3

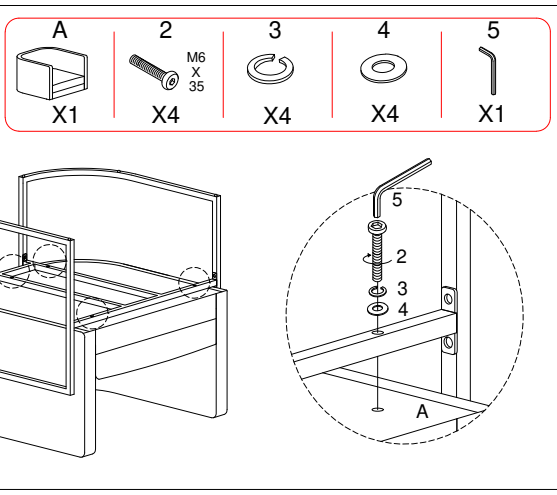
A
X1
2
M6
X
35
X4
3
X4
4
X4
5
X1

5
2
3
4
A

4

