UTAH

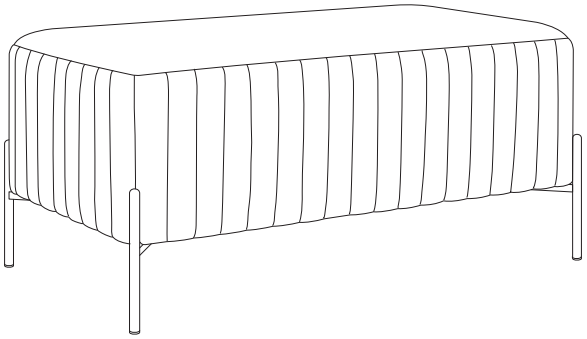

1/4

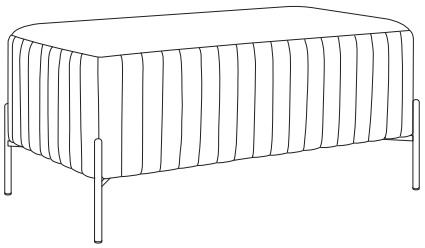

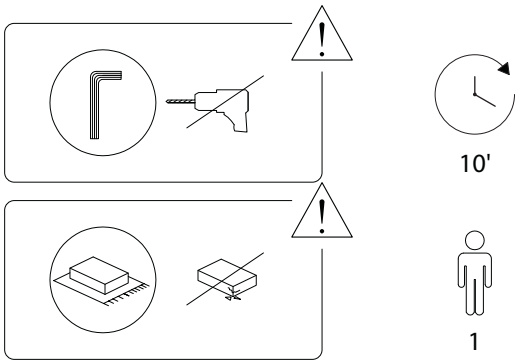

2/4

439/UTAH/120326/

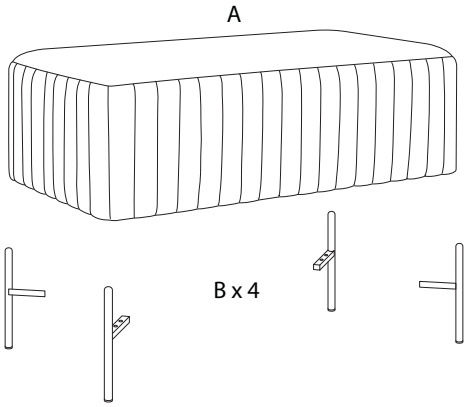

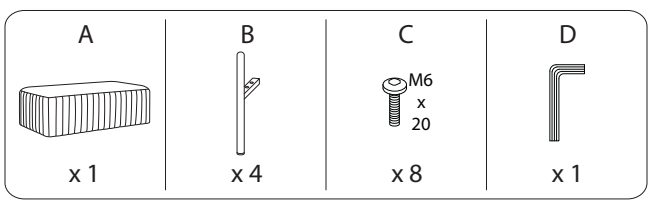

3/4

439/UTAH/120326/

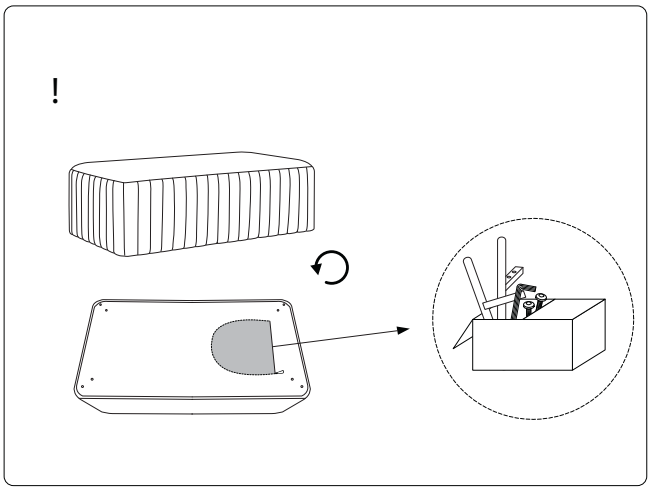

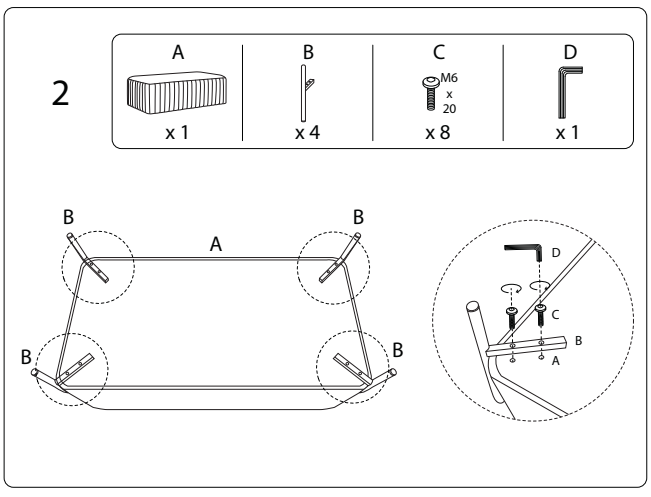

4/4

439/UTAH/120326/