LARCO



1/6



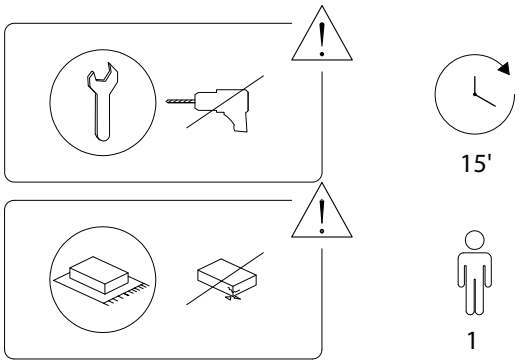

2/6

2673/LARCO/220426/

A	B	C
x 1	x 1	x 1

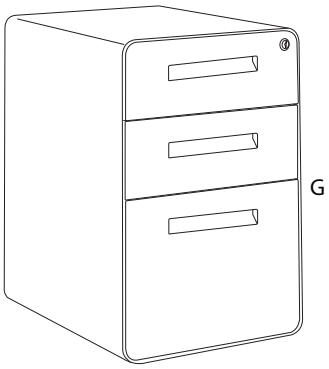



D	E	F	G
x 2	x 2	x 1	x 1

3/6

2673/LARCO/220426/

!

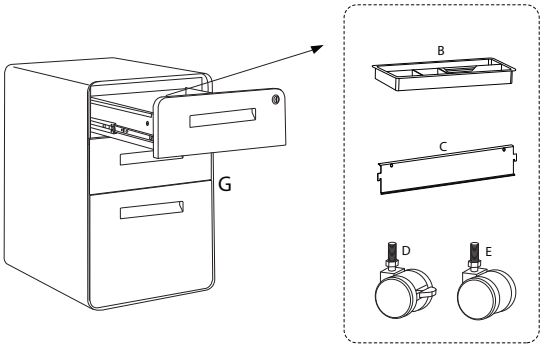

1

A	D	E	G
x 1	x 2	x 2	x 1

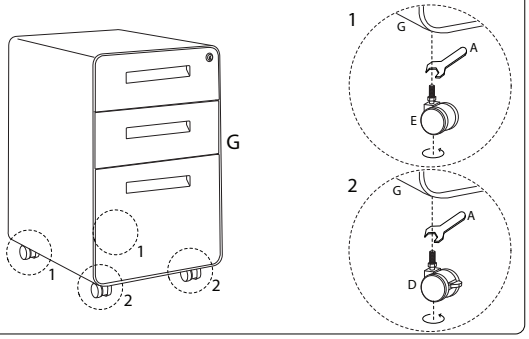

4/6

2673/LARCO/220426/

2

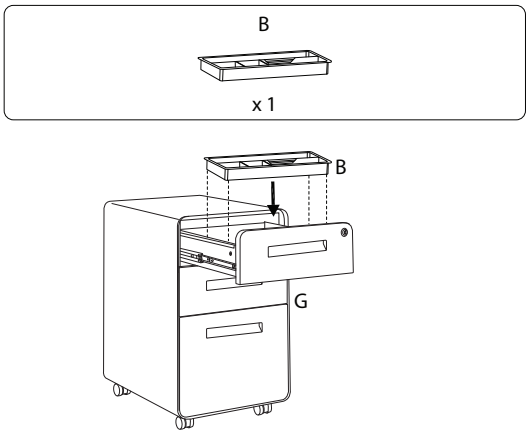

3

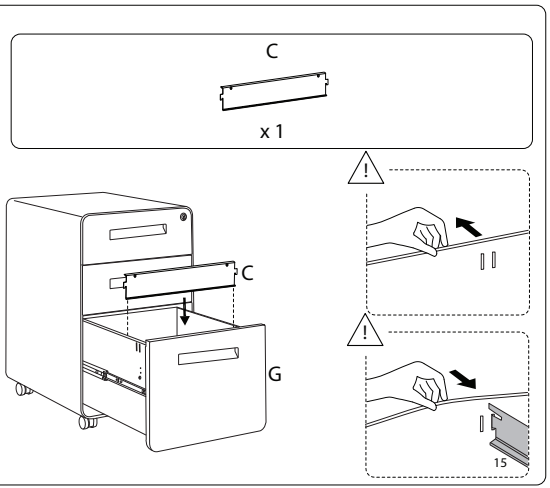

2673/LARCO/220426/

!

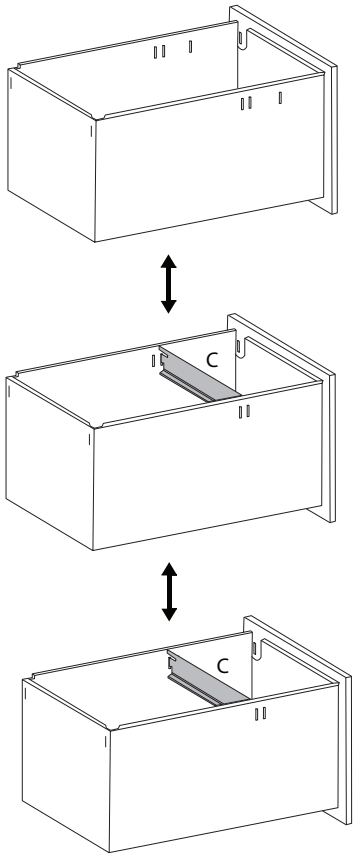

2673/LARCO/220426/