ARIZONA

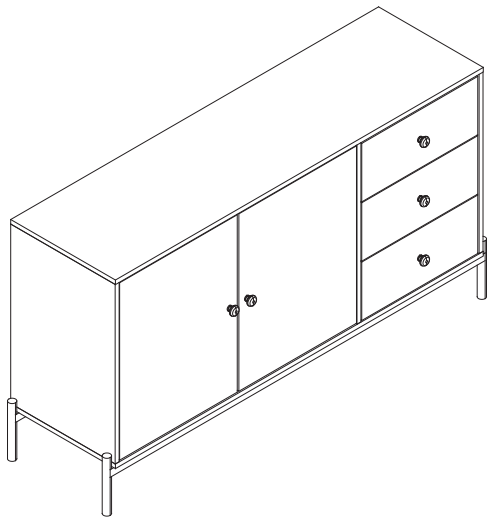

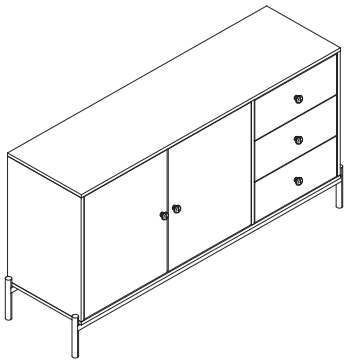

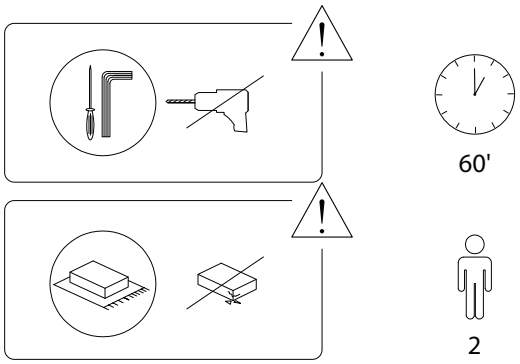

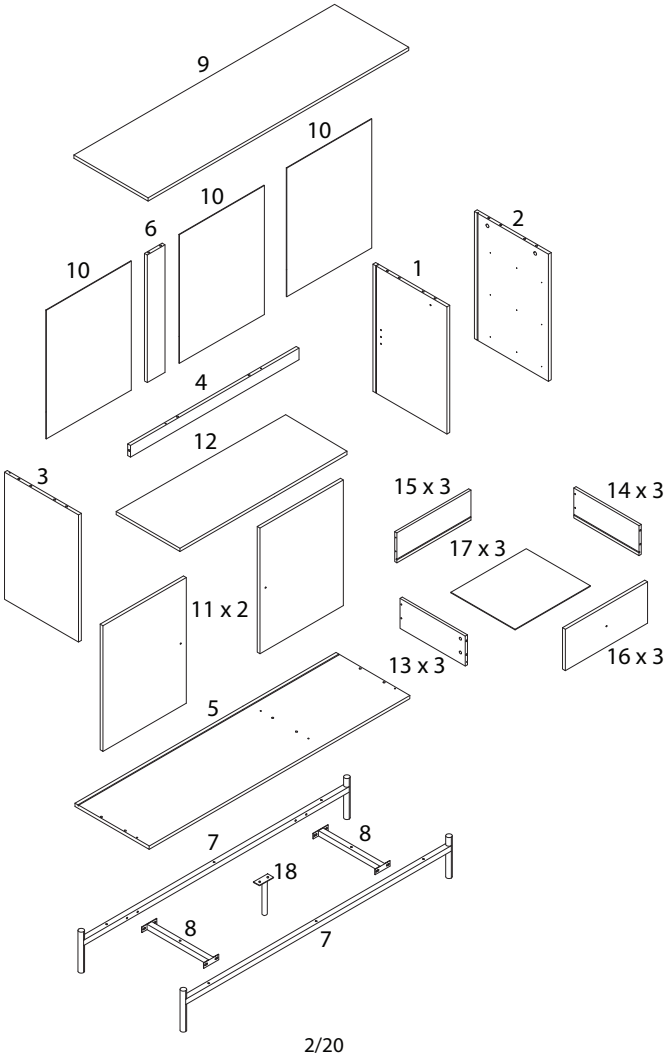

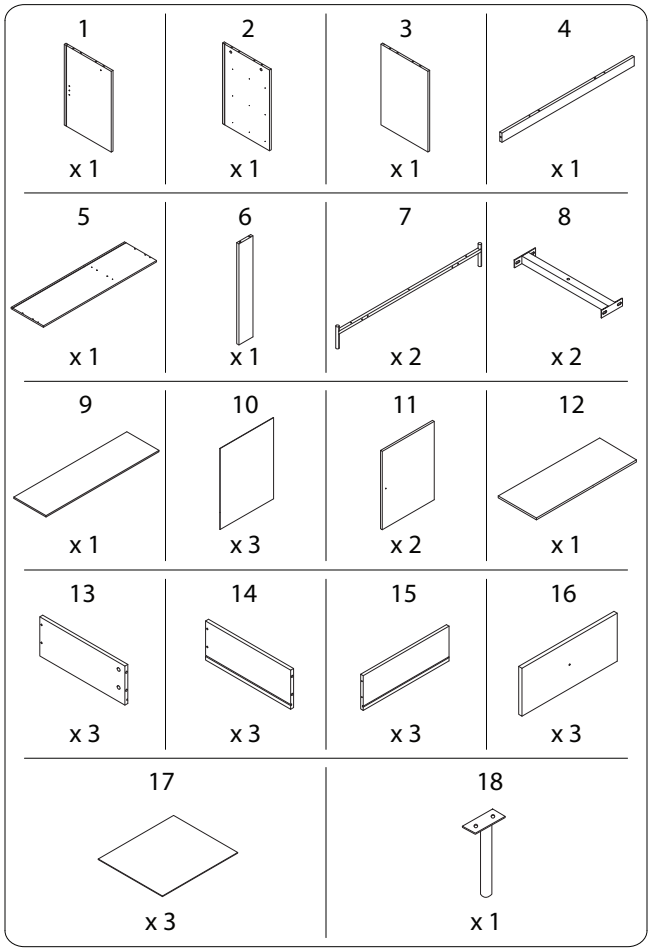

1251/ARIZONA/080824/

A	B	C
M4 x 15		
x 30	x 22	x 22
D	**E**	**F**
	M4 x 45	M4 x 15
x 14	x 20	x 8
G	**H**	**I**
M4 x 30	M4 x 50	
x 10	x 2	x 12
J	**K**	**L**
M4 x 20		M4 x 10
x 14	x 4	x 24
M	**N**	**O**
	M3.5 x 25	
x 5	x 5	x 4

P	Q	C_L
	M4 x 50	
x 1	x 2	x 3
C_R	**D_L**	**D_R**
x 3	x 3	x 3
R	**S**	**T**
x 4	x 2	x 2
U	**V**	
M4 x 20		
x 2	x 1	

1

1	2	A	C_L	C_R
		M4 x 15		
x 1	x 1	x 18	x 3	x 3

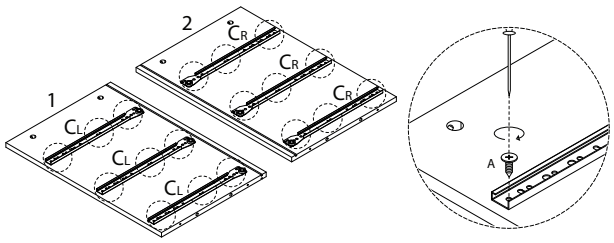

3

4	C
x 1	x 2

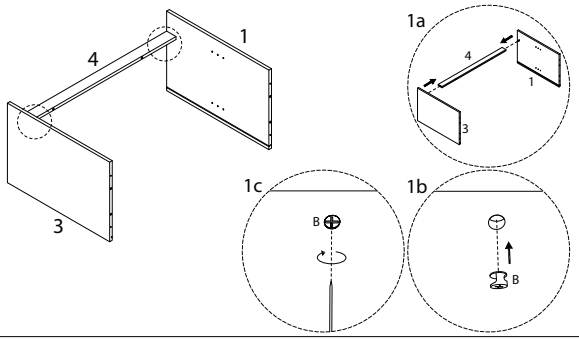

2

3	B
x 1	x 2

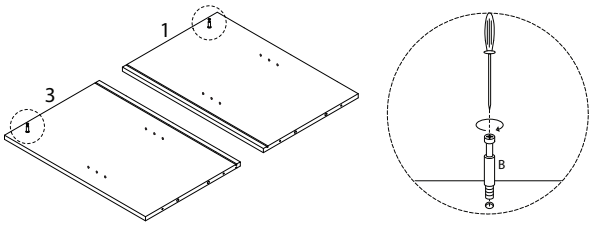

4

D
x 6

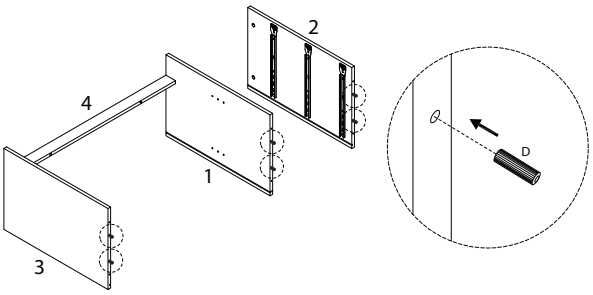

5

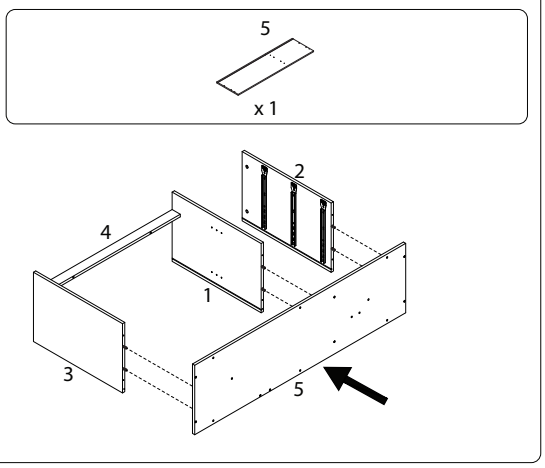

6

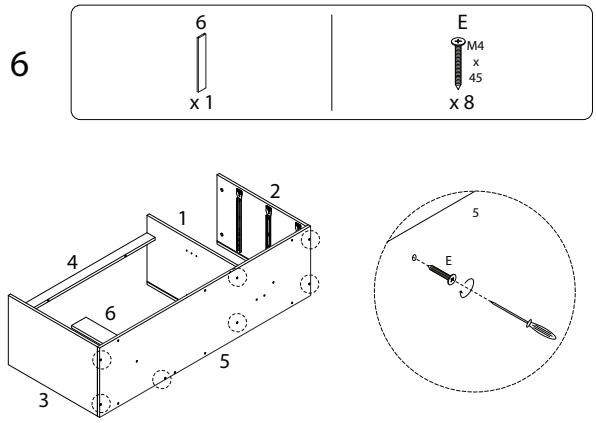

7

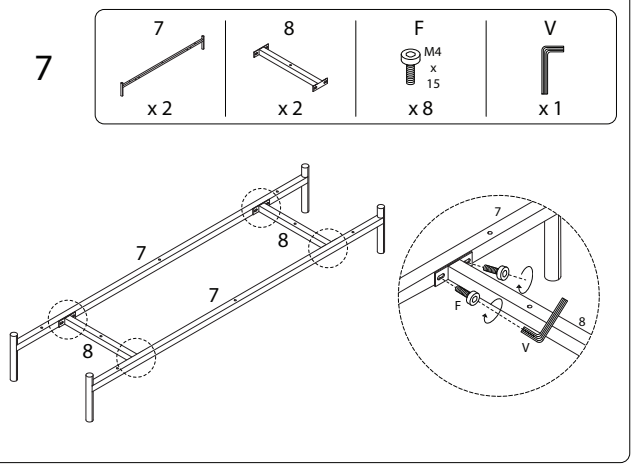

8

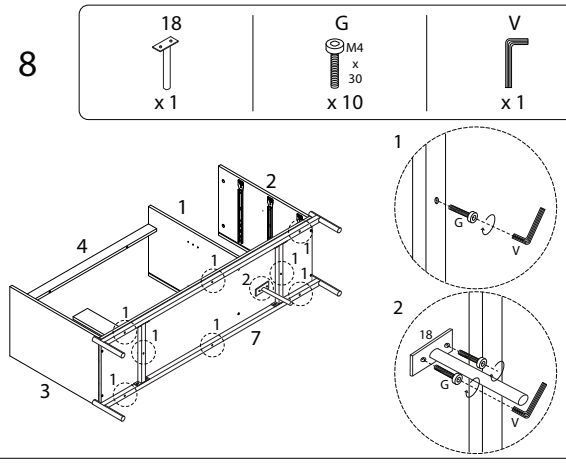

9

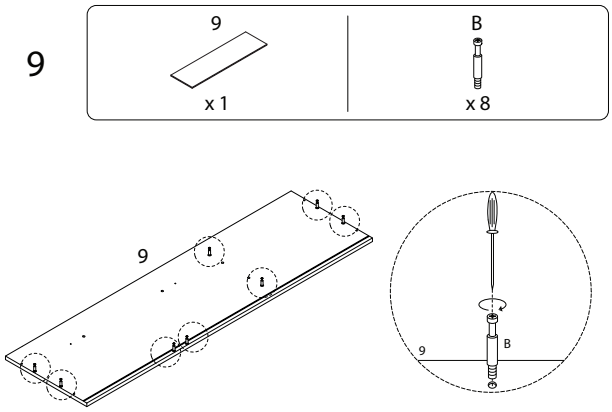

10

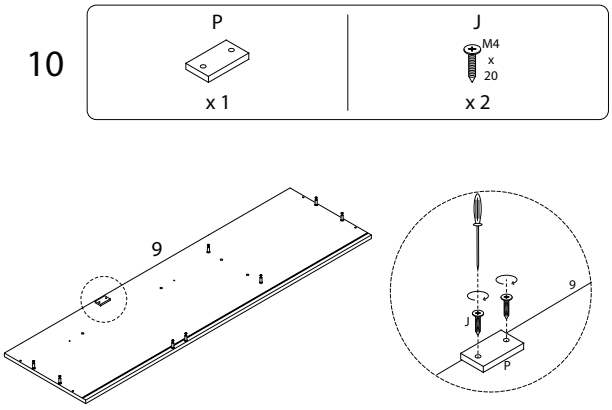

11

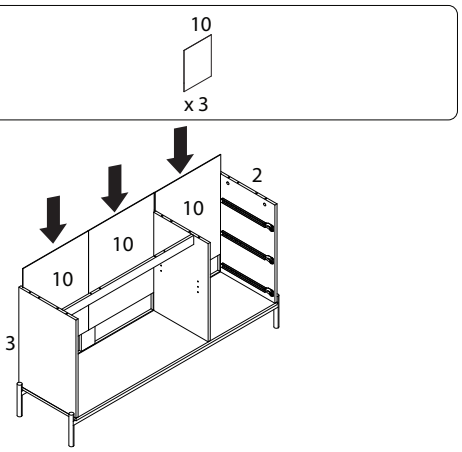

12

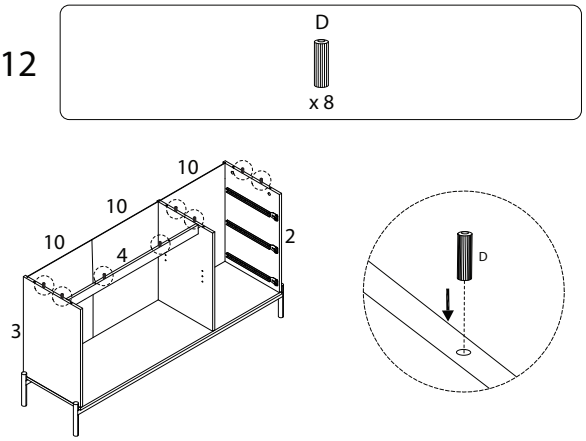

13

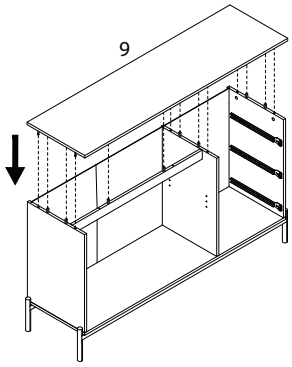

14

H
M4 x 50
x 2

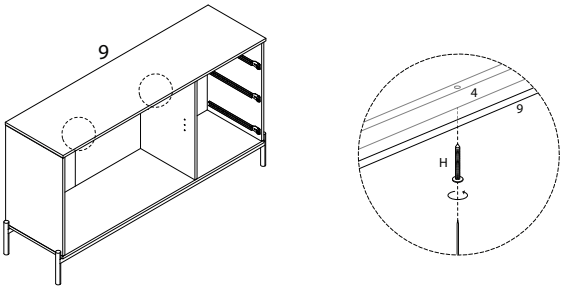

15

C
x 8

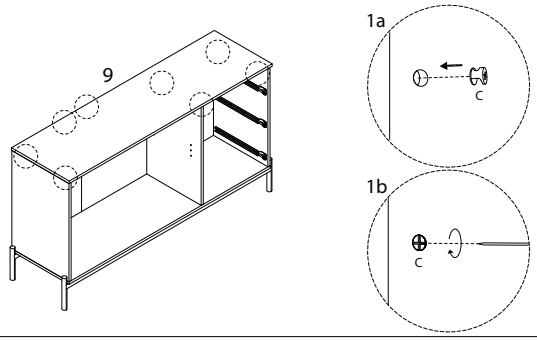

16

I
x 12

J
M4 x 20
x 12

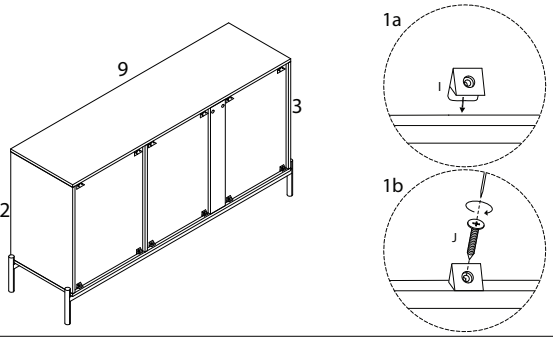

17 x 2

11
x 1

K
x 2

L
M4 x 10
x 4

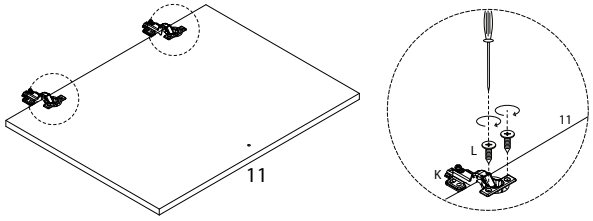

18

M
x 2

N
M3.5 x 25
x 2

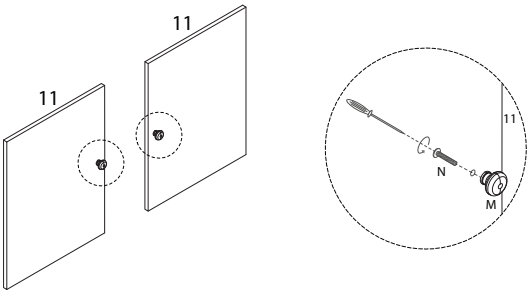

19

L
M4 x 10
x 16

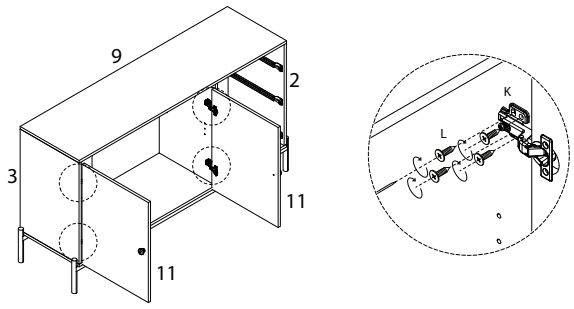

20

O
x 4

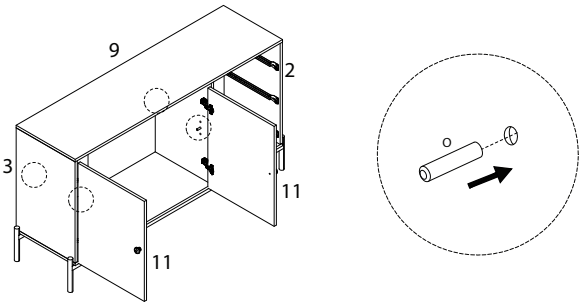

21

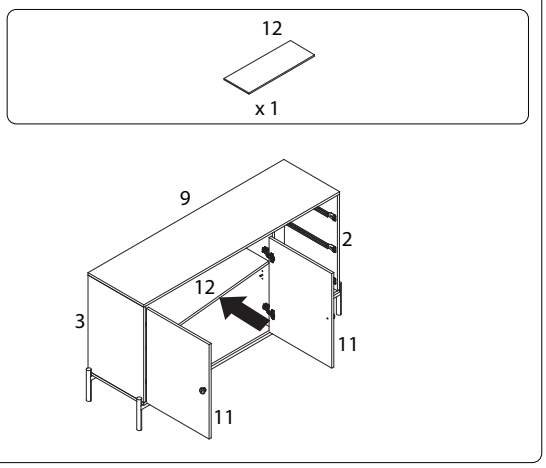

22 x 3

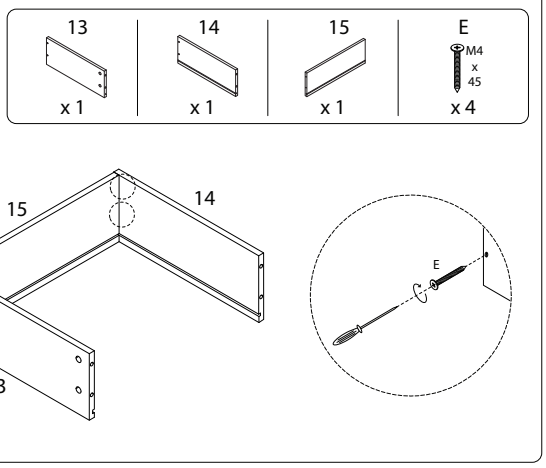

23 x 3

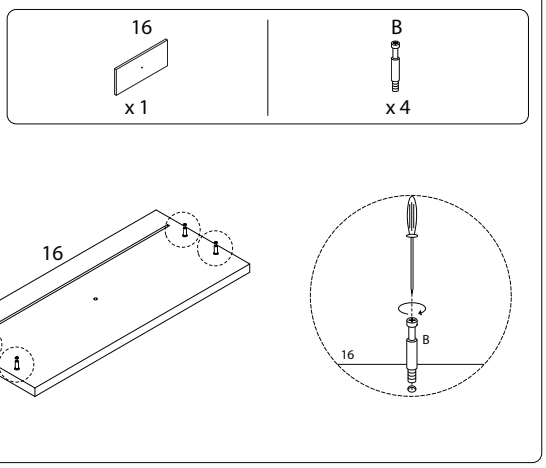

24 x 3

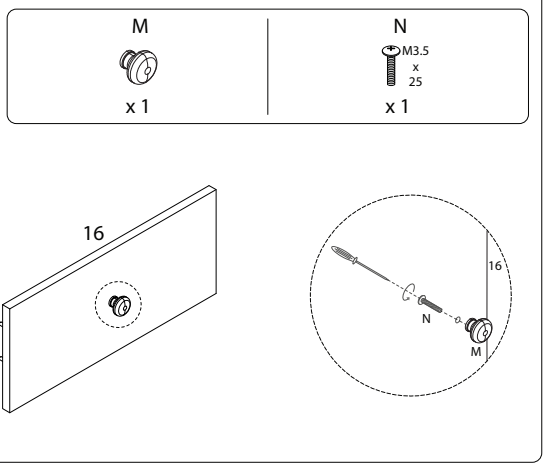

25 x 3

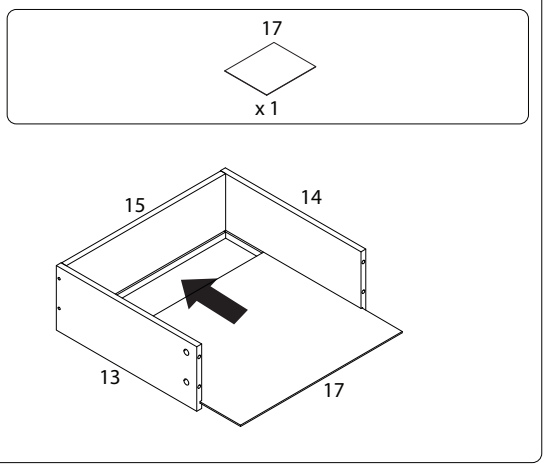

26 x 3

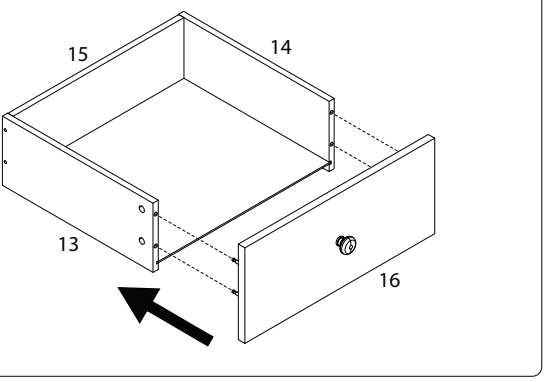

27 x 3

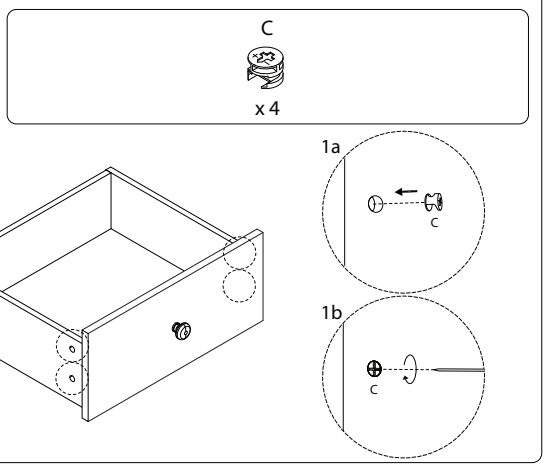

28 x 3

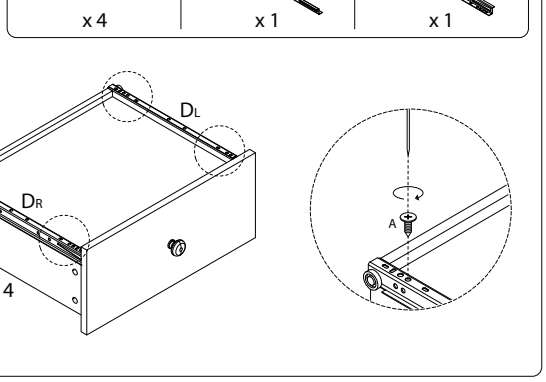

29

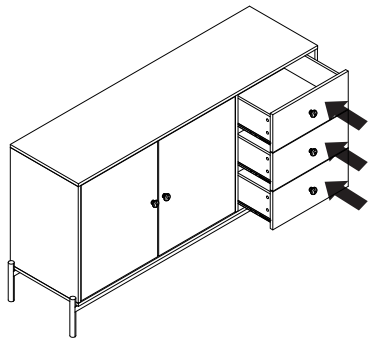

30

Q	R	S	T	U
M4 x 50				M4 x 20
x 2	x 2	x 2	x 2	x 2

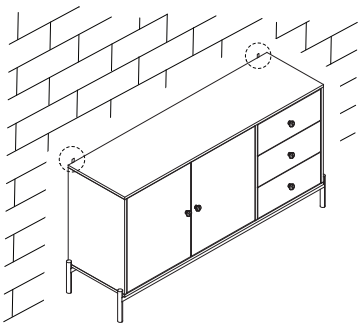

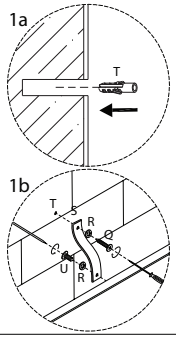

1251/ARIZONA/080824/