BRADLEY

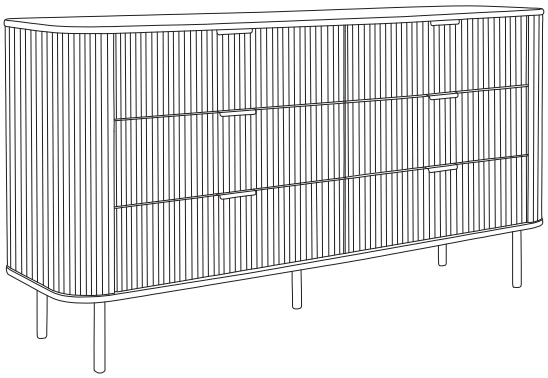

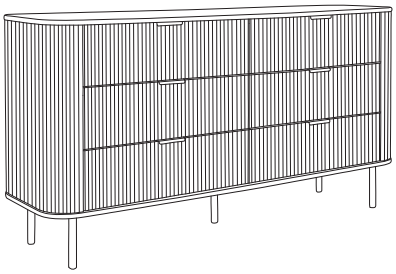

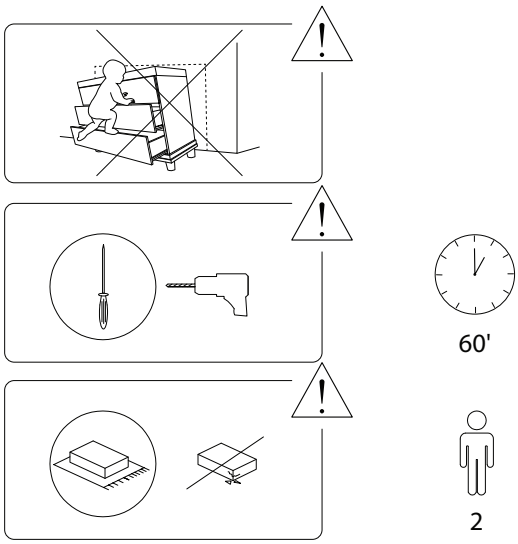
60'
2

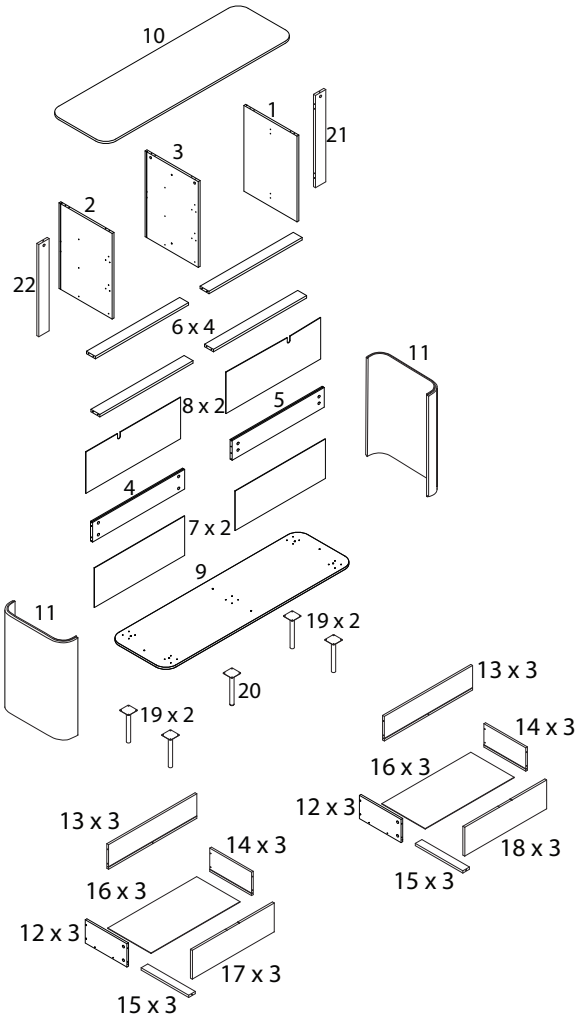
10
1
21
3
2
22
6 x 4
11
8 x 2
5
4
7 x 2
9
11
19 x 2
20
13 x 3
19 x 2
14 x 3
16 x 3
12 x 3
13 x 3
14 x 3
18 x 3
15 x 3
16 x 3
12 x 3
17 x 3
15 x 3

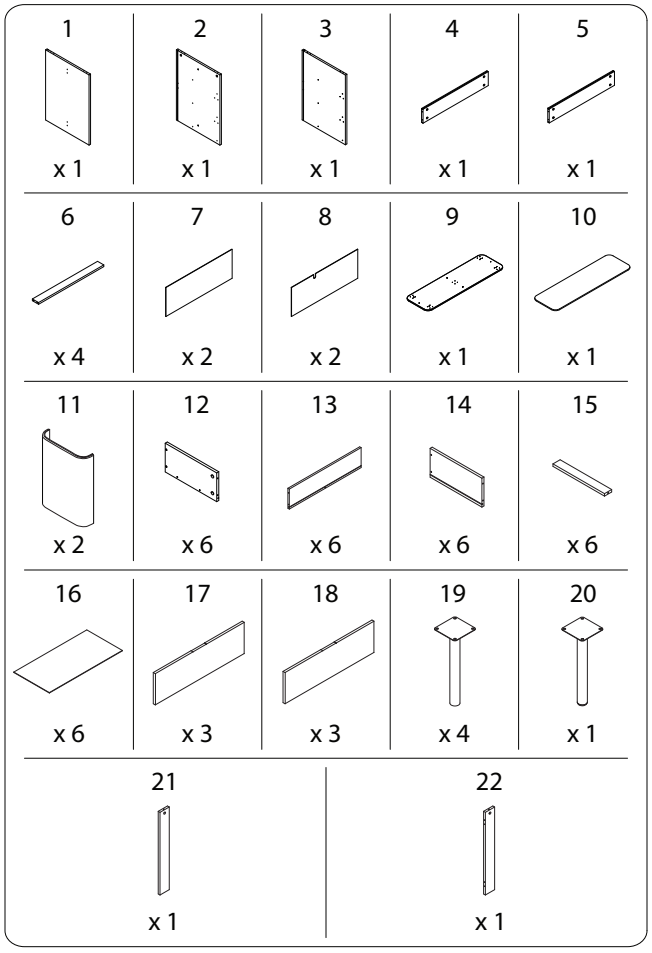
1 x 1
2 x 1
3 x 1
4 x 1
5 x 1
6 x 4
7 x 2
8 x 2
9 x 1
10 x 1
11 x 2
12 x 6
13 x 6
14 x 6
15 x 6
16 x 6
17 x 3
18 x 3
19 x 4
20 x 1
21 x 1
22 x 1

A	B	C
x 54	x 54	x 24
D M4 x 35 x 44	E M4 x 14 x 22	F x 2
G M3 x 12 x 60	H x 6	I x 2
J M3 x 16 x 16	K x 16	L x 6
M x 6	N x 6	O x 6

1 x 6

12	13	14	15	D
x 1	x 1	x 1	x 1	M4 x 35 x 5

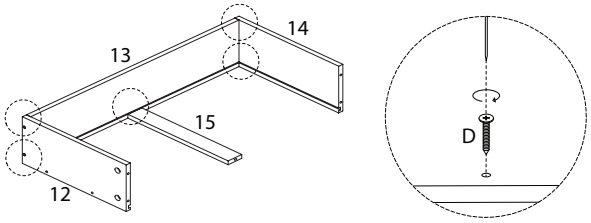

2 x 6

16
x 1

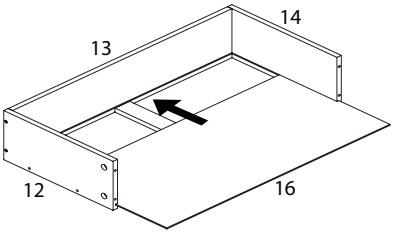

3 x 3

17	18	A
x 1	x 1	x 10

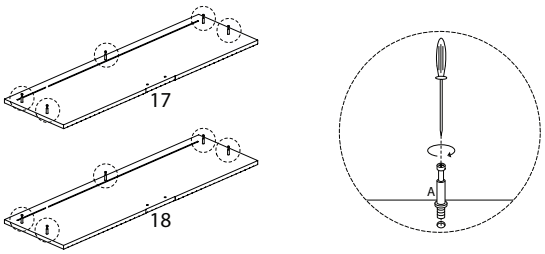

5 x 3

B
x 10

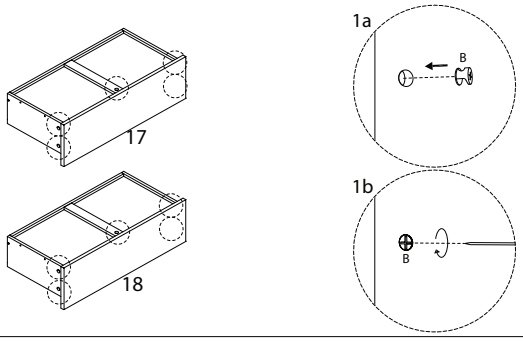

4 x 3

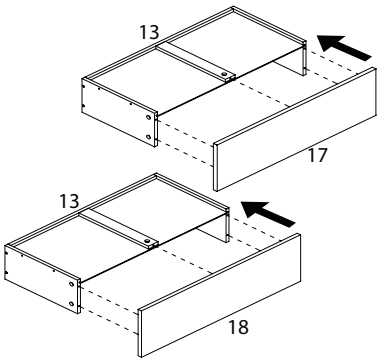

6 x 3

G	N	O
M3 x 12 x 8	x 2	x 2

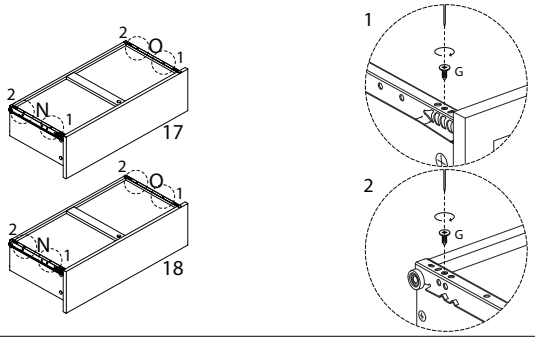

7 x 3

G	H
M3 x 12	
x 4	x 2

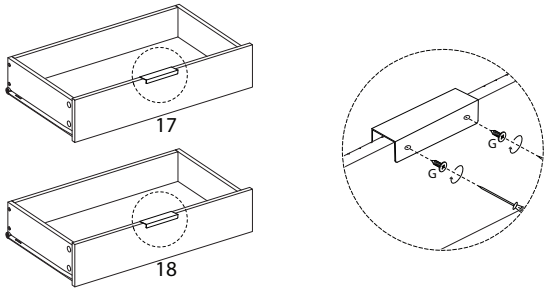

8

1	G	L
	M3 x 12	
x 1	x 6	x 3

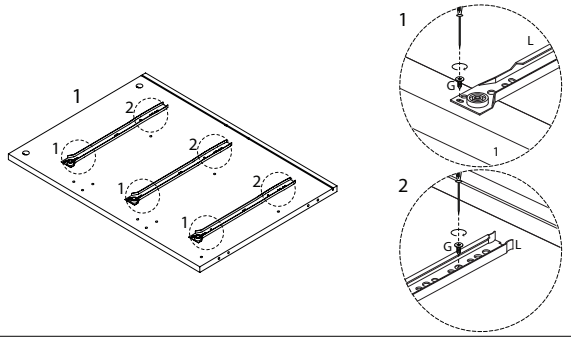

9

2	G	M
	M3 x 12	
x 1	x 6	x 3

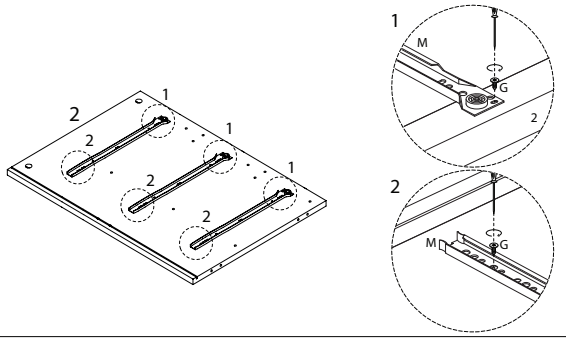

10

A
x 8

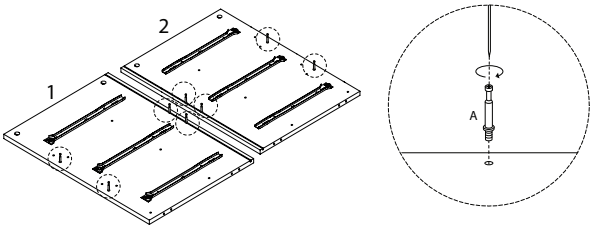

11

3	G	L
	M3 x 12	
x 1	x 6	x 3

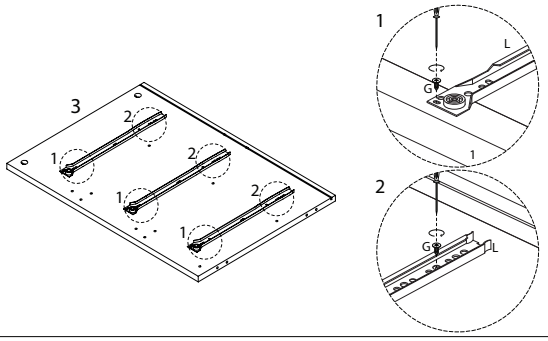

13

A
x 4

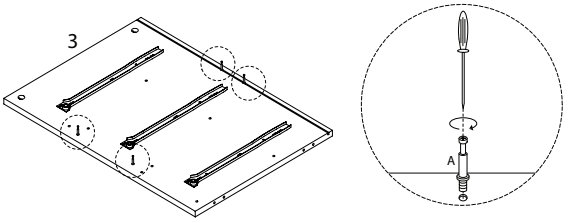

12

G	M
M3 x 12	
x 6	x 3

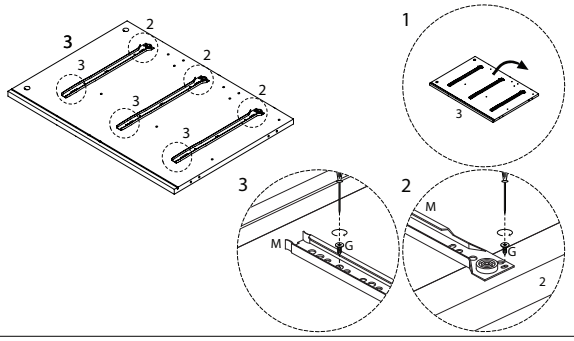

14

A
x 4

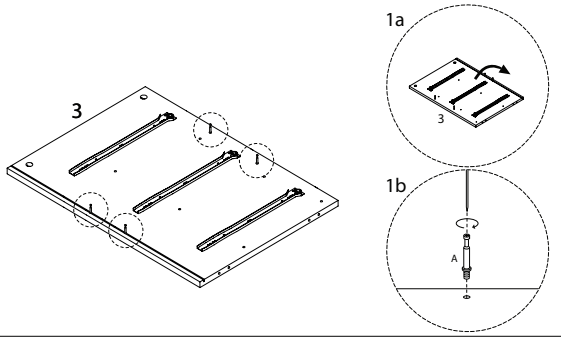

15

21	22	C
x 1	x 1	x 4

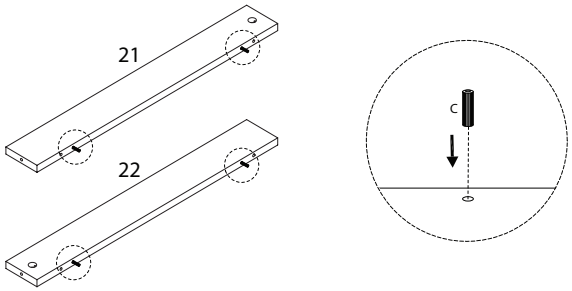

16

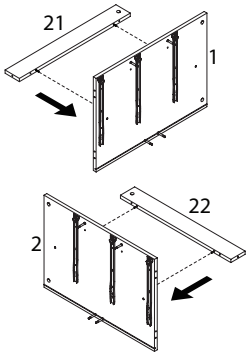

17

D
M4 x 35
x 4

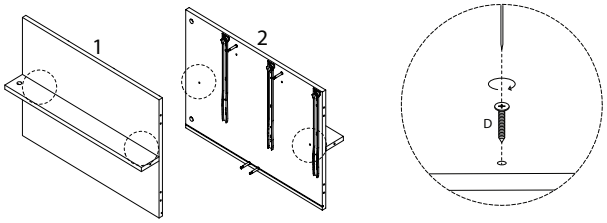

18 x 4

6	C
x 1	x 2

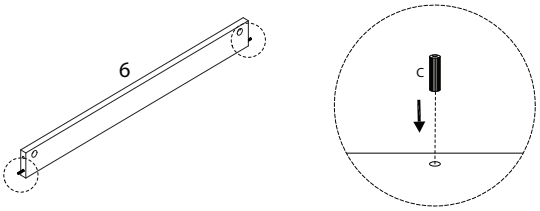

19

4	5
x 1	x 1

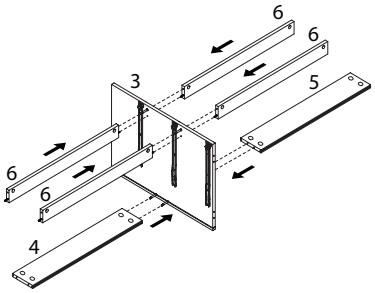

20

B
x 8

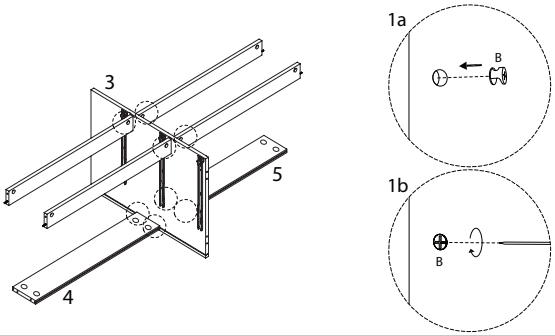

21

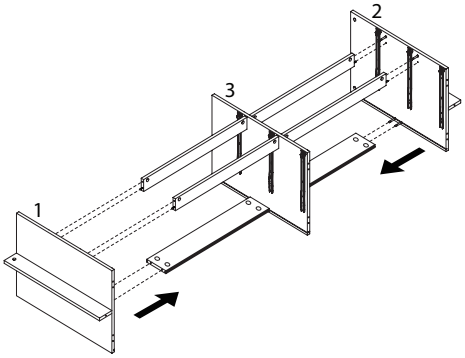

22

B
x 8

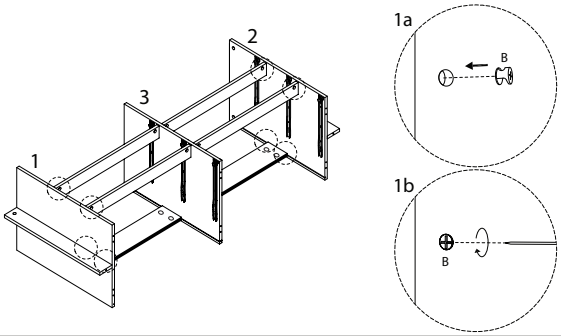

23

8

x 2

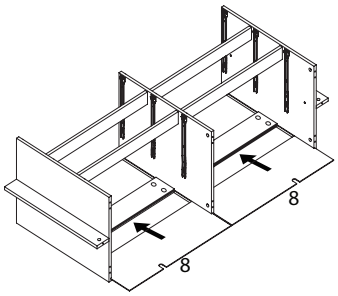

24

10

x 1

A

x 8

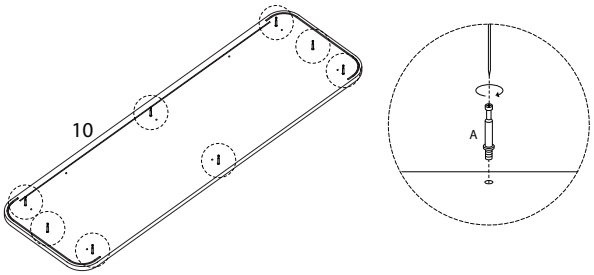

25

C

x 6

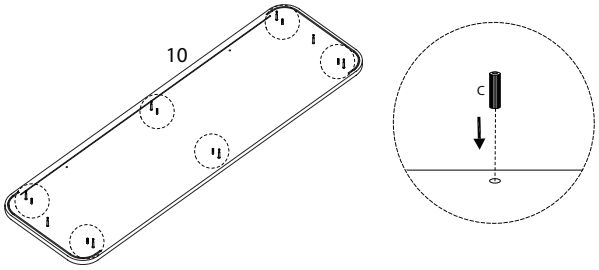

26

E

M4 x 14

x 2

F

x 2

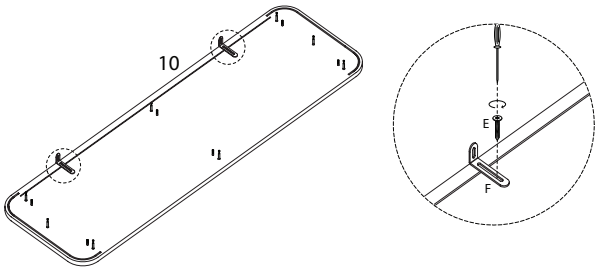

27

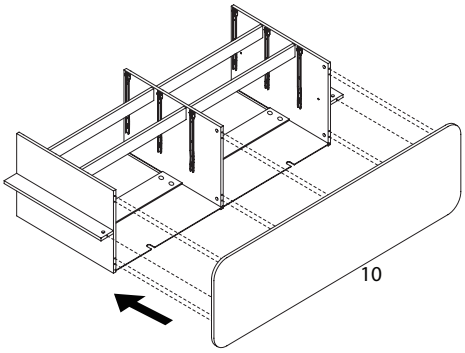

28

B

x 8

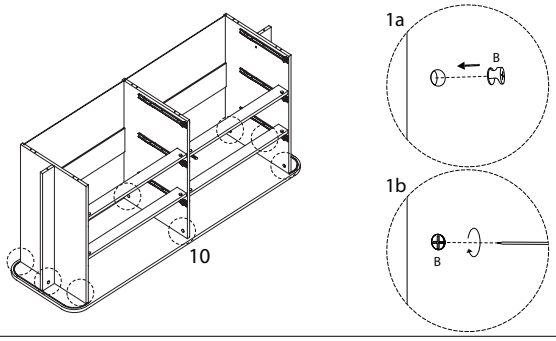

29

7

x 2

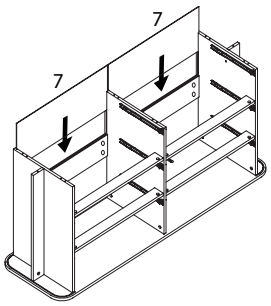

30

C

x 6

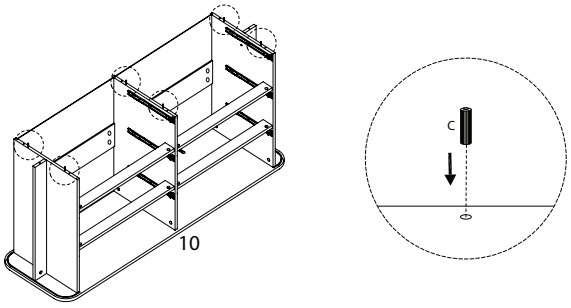

31

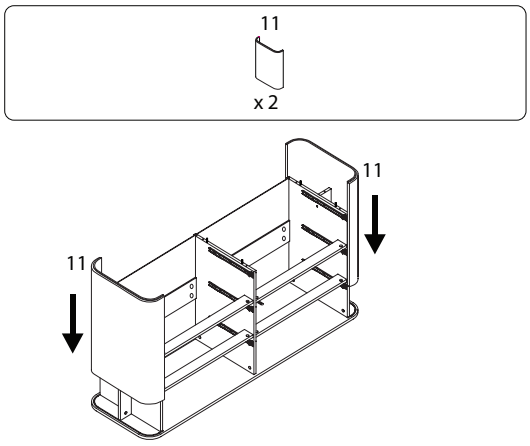

32

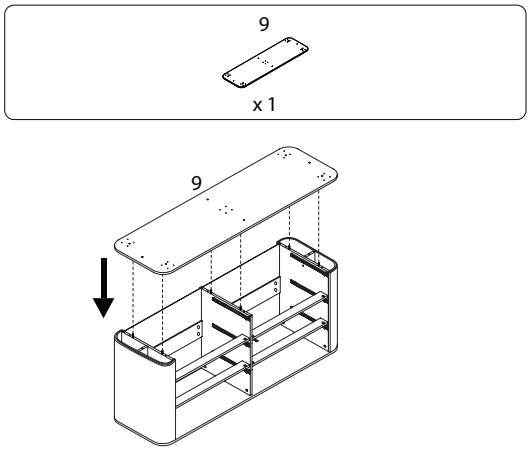

33

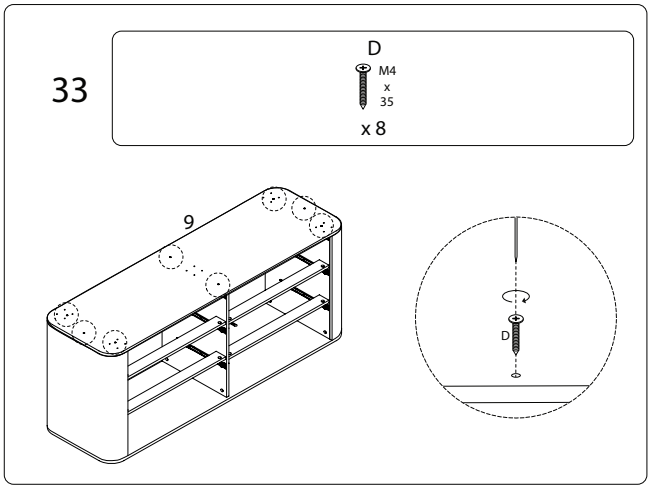

34

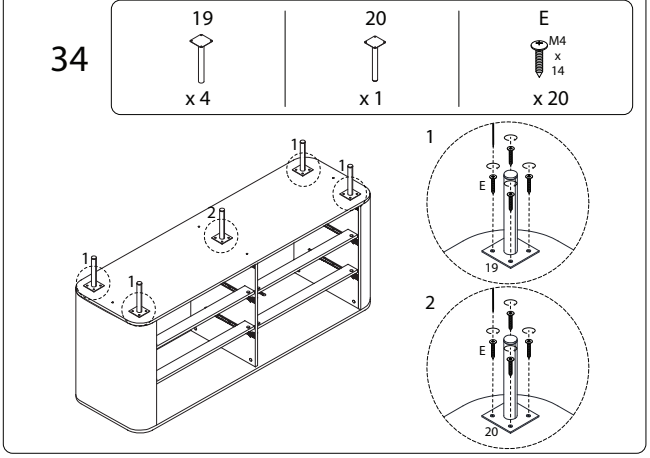

35

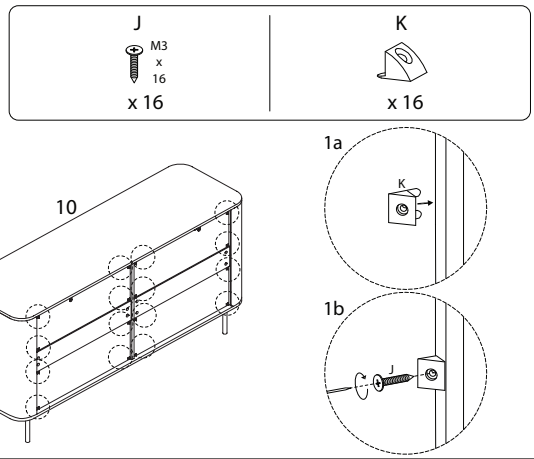

36

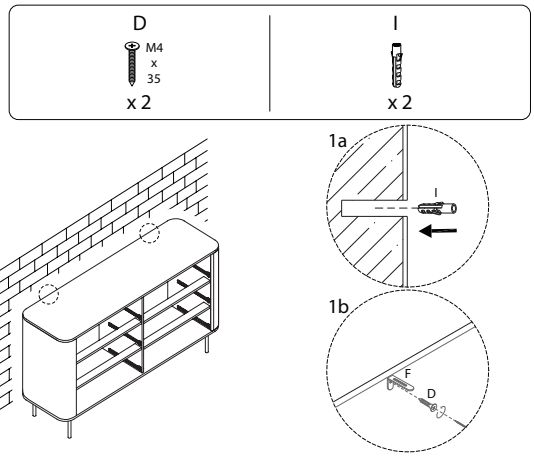
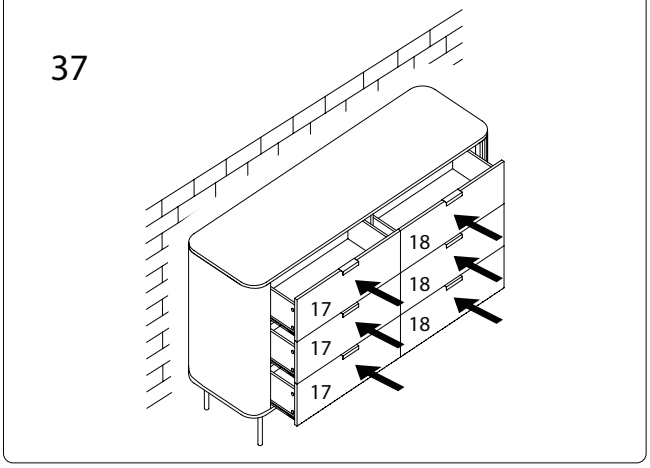
37