OWASSO

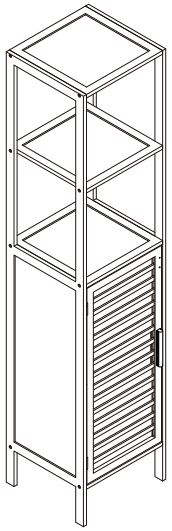

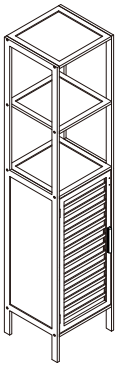

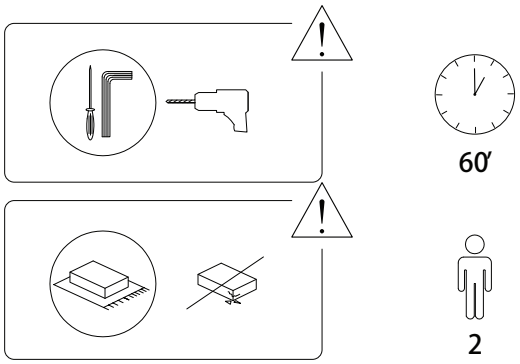

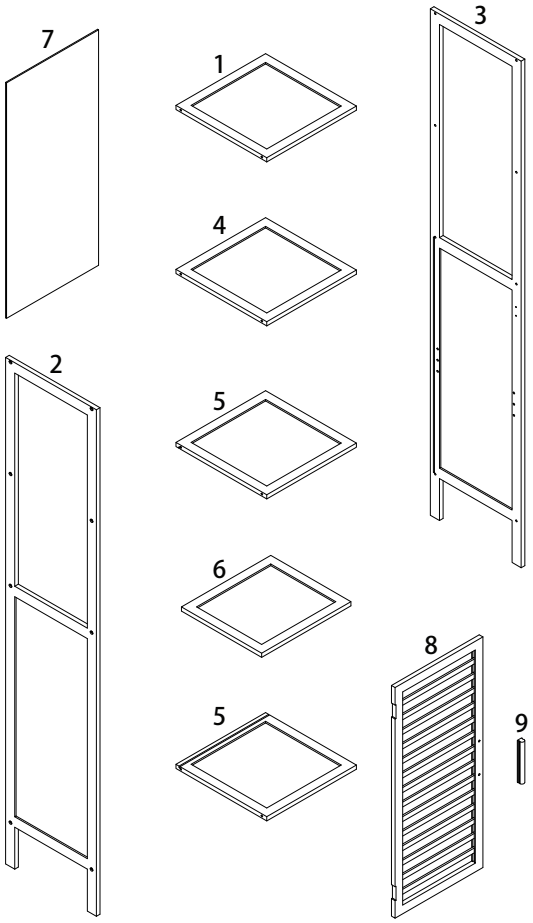

1	2	3	4	5
x 1	x 1	x 1	x 1	x 2
6	7	8	9	A
x 1	x 1	x 1	x 1	M5 x 30 x 16
B	C	D	E	F
x 1	x 1	M4 x 20 x 2	x 2	M3 x 12 x 12
G	H	I	J	K
x 4	M4 x 12 x 1	M4 x 35 x 1	x 1	x 1
L		M		
x 2		x 1		

1

3	B	F
x 1	x 1	M3 x 12 x 2

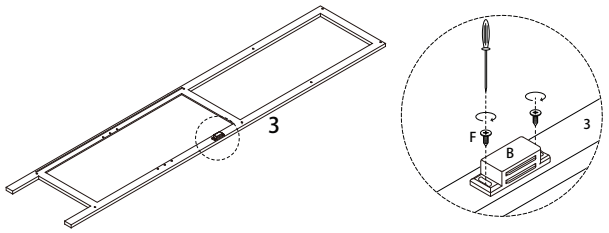

2

1	H	K	L
x 1	M4 x 12 x 1	x 1	x 1

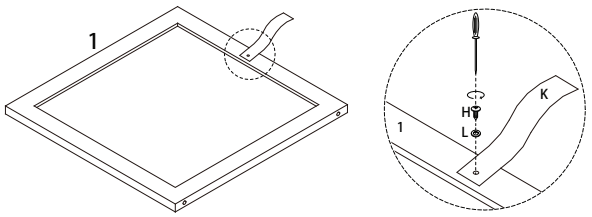

Beliani
2213/OWASSO270524/

3

2	4	5	A	M
x 1	x 1	x 2	M5 x 30 x 8	x 1

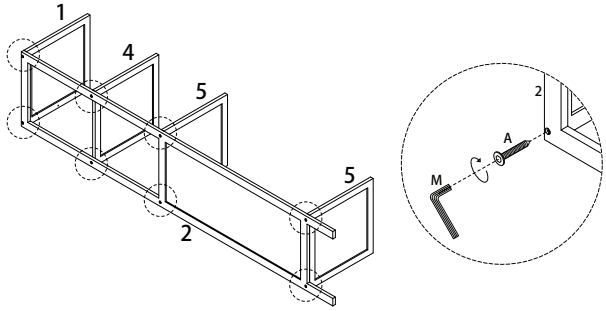

4

7
x 1

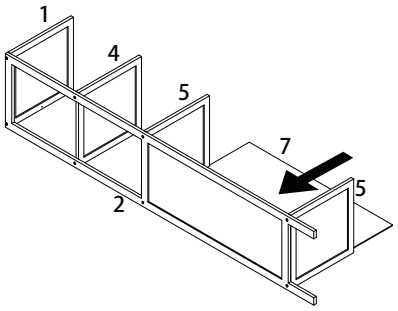

Beliani
2213/OWASSO270524/

5

A	M
M5 x 30 x 8	x 1

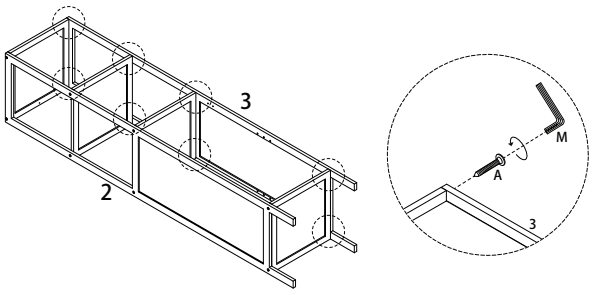

6

8	C	F
x 1	x 1	M3 x 12 x 2

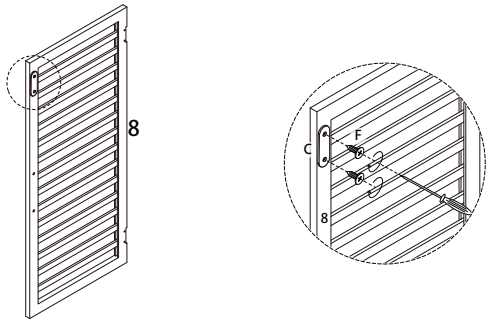

Beliani
2213/OWASSO270524/

7

9	D
x 1	M4 x 20 x 2

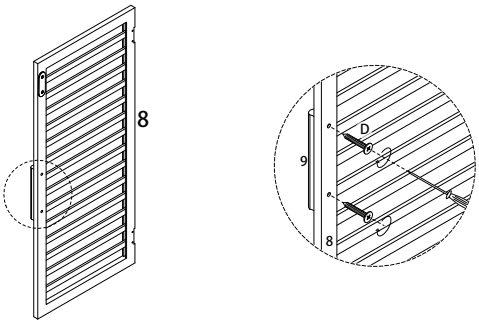

8

E	F
x 2	M3 x 12 x 8

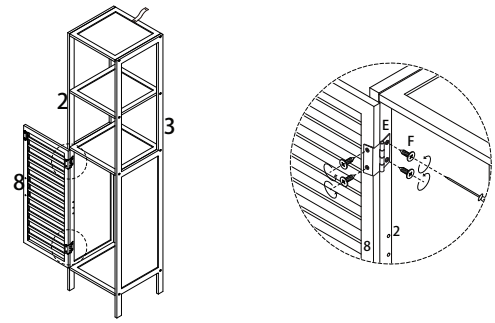

Beliani
2213/OWASSO270524/

9

G

x 4

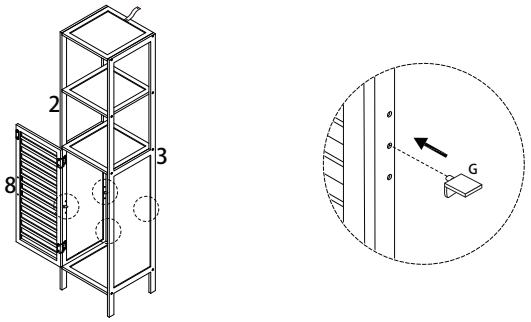

10

6

x 1

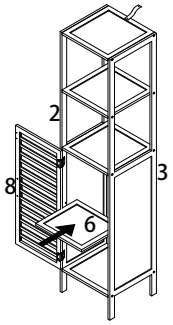

Beliani

2213/OWASSQ270524

11

I



x 1

J



x 1

L



x 1

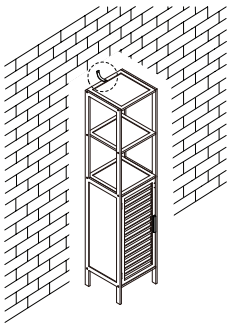

1a

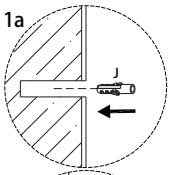

1b

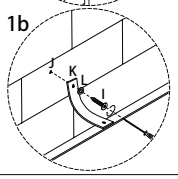

Beliani

2213/OWASSQ270524