OLATE

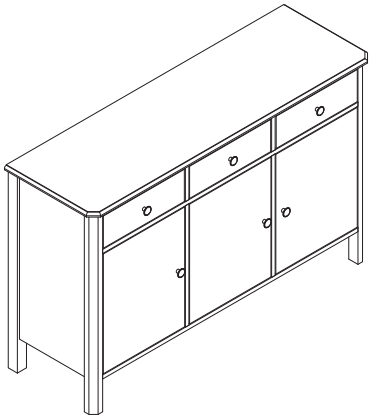

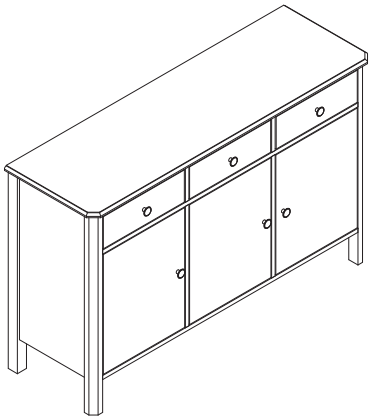

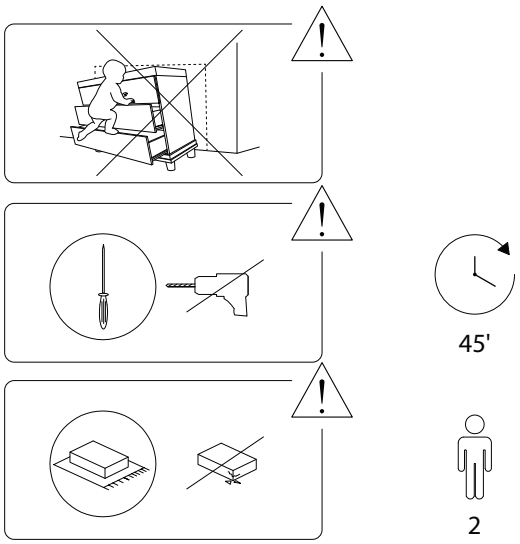
45'
2

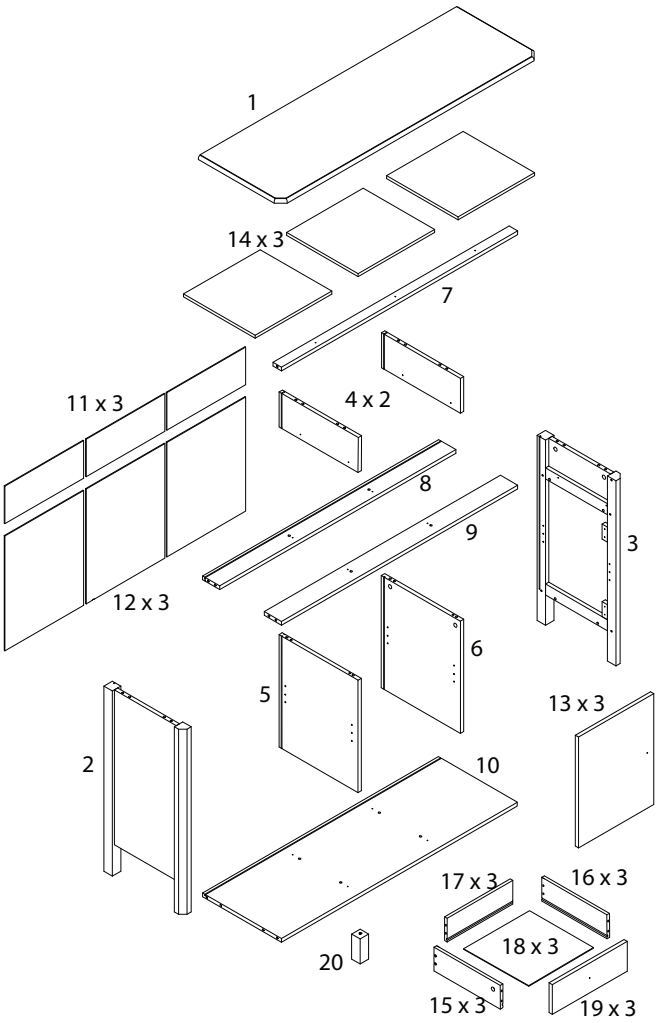
1
14 x 3
7
11 x 3
4 x 2
8
9
3
12 x 3
6
5
13 x 3
2
10
17 x 3
16 x 3
18 x 3
20
15 x 3
19 x 3

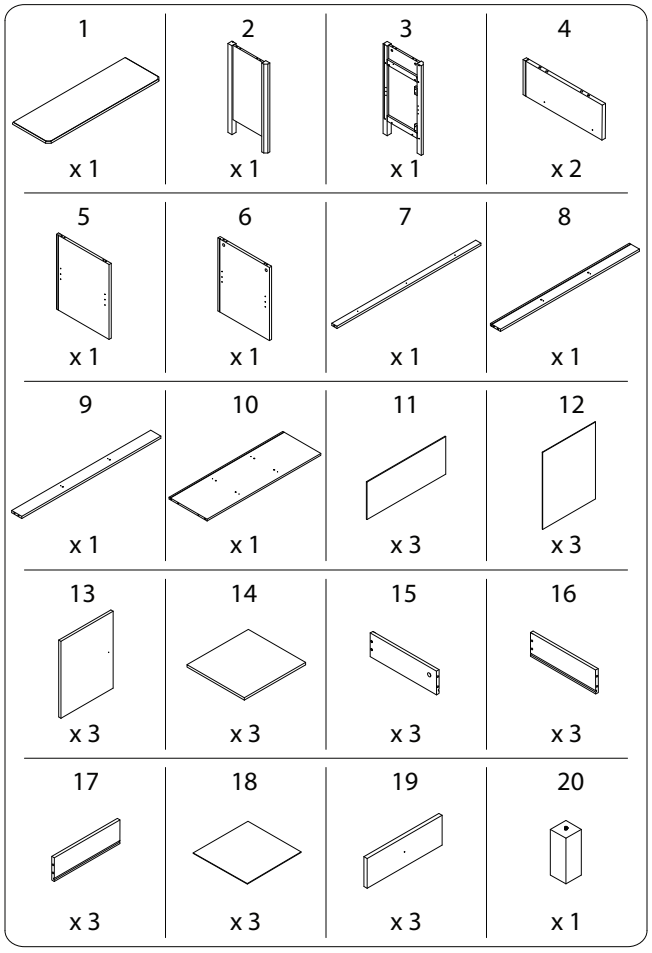
1 x 1
2 x 1
3 x 1
4 x 2
5 x 1
6 x 1
7 x 1
8 x 1
9 x 1
10 x 1
11 x 3
12 x 3
13 x 3
14 x 3
15 x 3
16 x 3
17 x 3
18 x 3
19 x 3
20 x 1

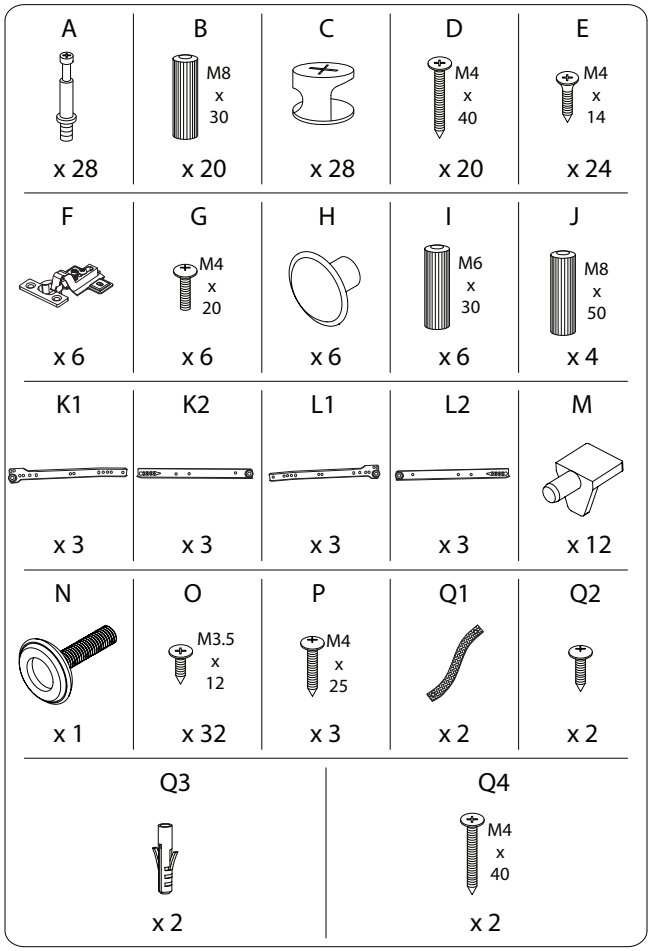
A
x 28
B
M8 x 30
x 20
C
x 28
D
M4 x 40
x 20
E
M4 x 14
x 24
F
x 6
G
M4 x 20
x 6
H
x 6
I
M6 x 30
x 6
J
M8 x 50
x 4
K1
x 3
K2
x 3
L1
x 3
L2
x 3
M
x 12
N
x 1
O
M3.5 x 12
x 32
P
M4 x 25
x 3
Q1
x 2
Q2
x 2
Q3
x 2
Q4
M4 x 40
x 2

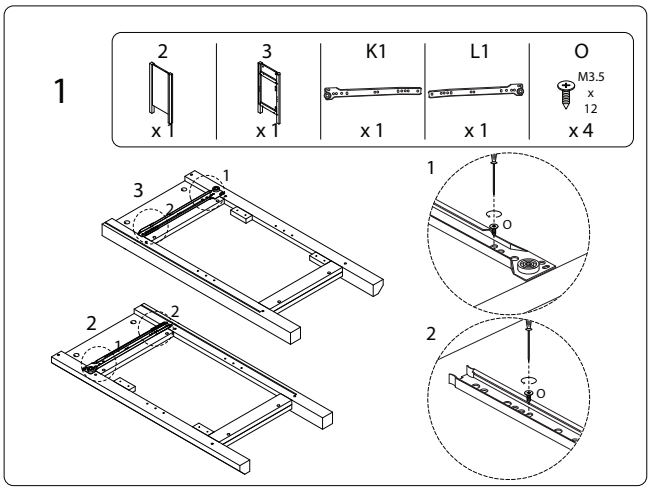
1
2
x 1
3
x 1
K1
x 1
L1
x 1
O
M3.5 x 12
x 4
1
2
3
O

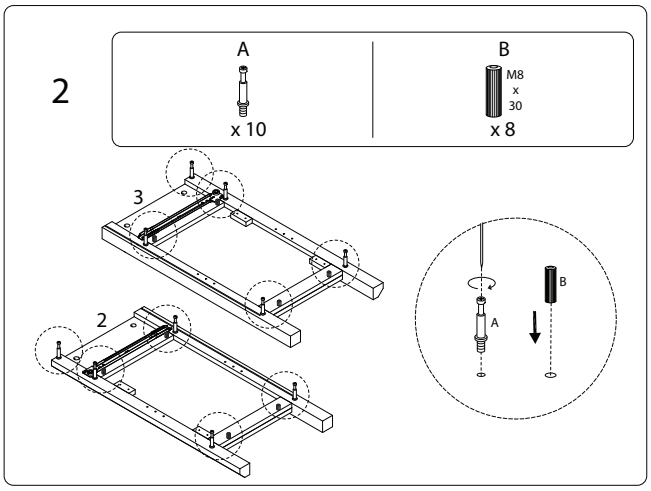
2
A
x 10
B
M8 x 30
x 8
3
2
A
B

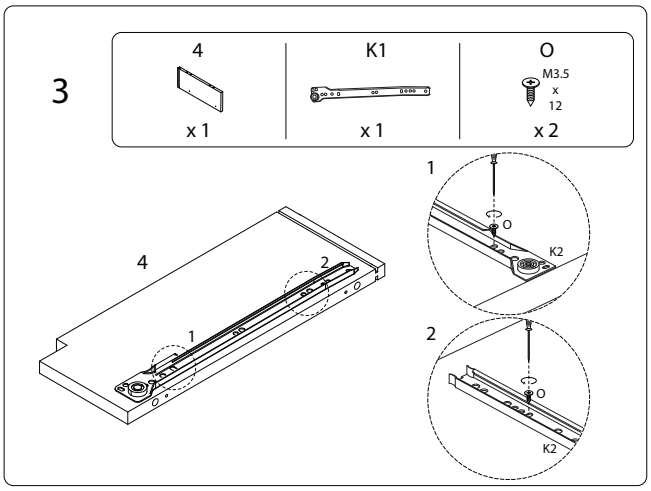
3
4
x 1
K1
x 1
O
M3.5 x 12
x 2
4
1
2
1
O
K2
2
O
K2

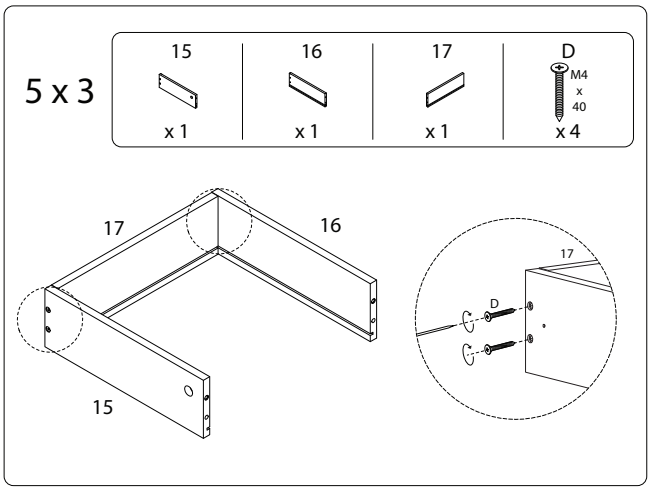
5 x 3
15
x 1
16
x 1
17
x 1
D
M4 x 40
x 4
17
16
15
17
D

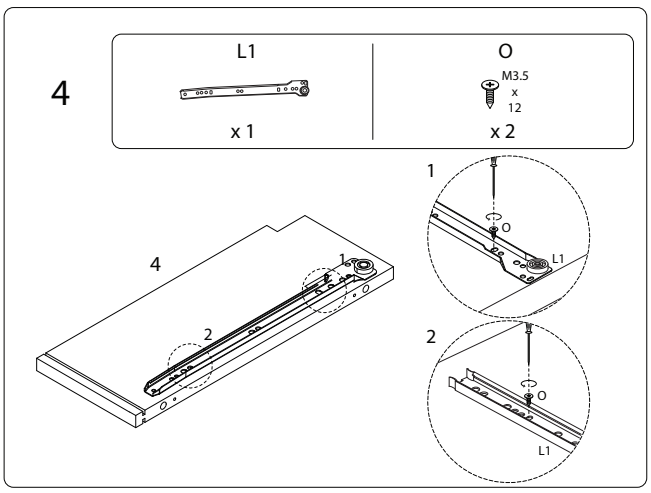
4
L1
x 1
O
M3.5 x 12
x 2
4
1
2
1
O
L1
2
O
L1

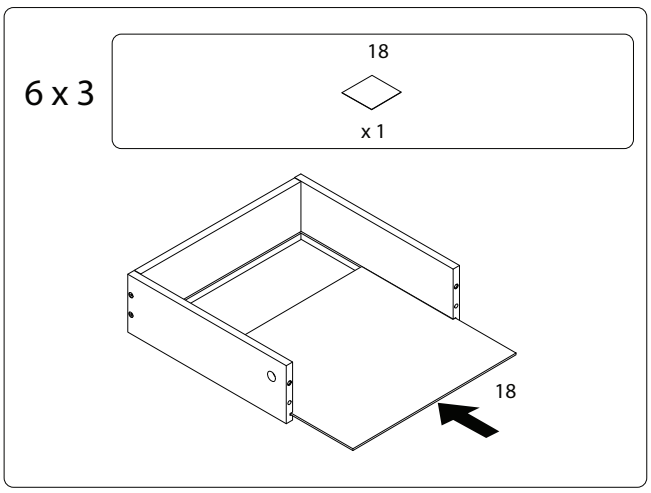
6 x 3
18
x 1
18

7 x 3

19	A	I
x 1	x 2	M6 x 30 x 2

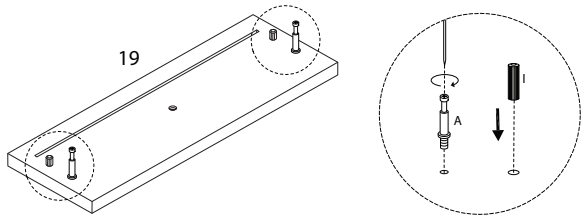

9 x 3

C
x 2

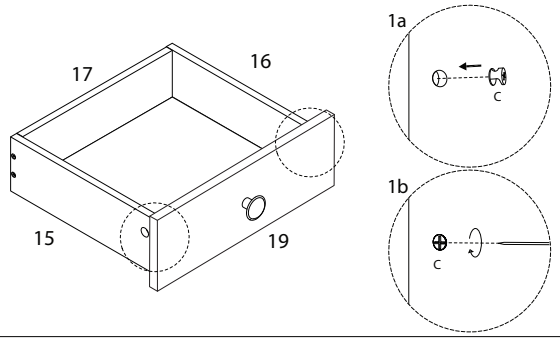

8 x 3

G	H
M4 x 20 x 1	x 1

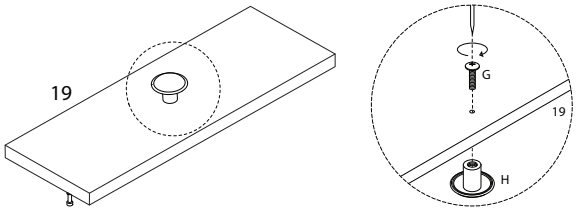

10 x 3

K2	L2	O
x 1	x 1	M3.5 x 12 x 4

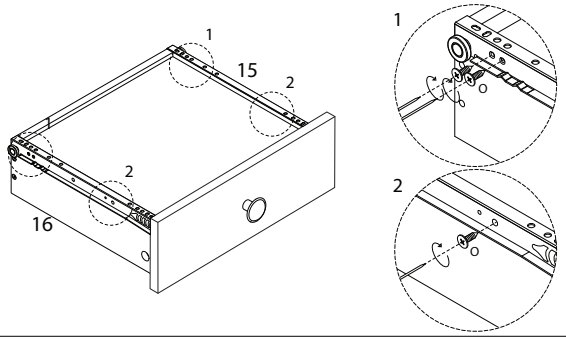

11

8	9	D
x 1	x 1	M4 x 40 x 4

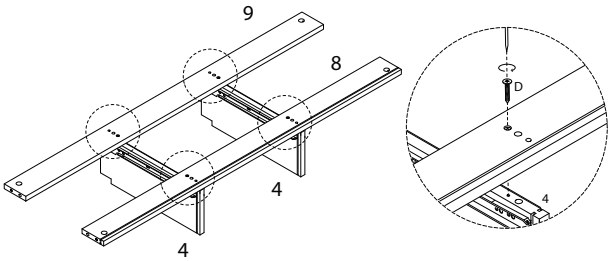

13

5	6	C
x 1	x 1	x 4

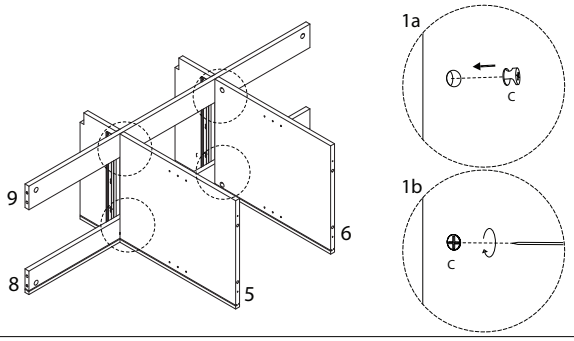

12

A	J
x 4	M8 x 50 x 4

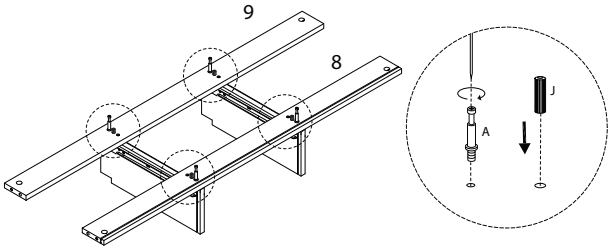

14

12
x 1

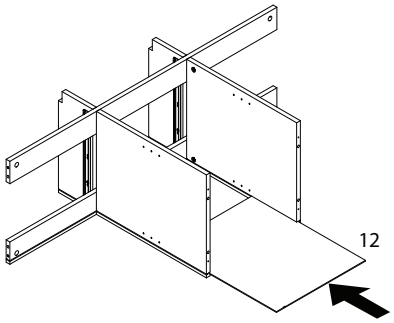

15

B
M8 x 30
x 4

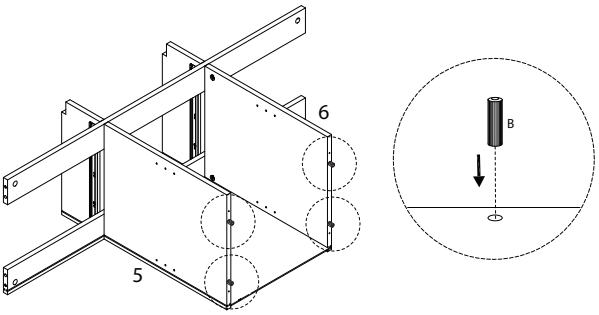

16

10	D
x 1	M4 x 40 x 4

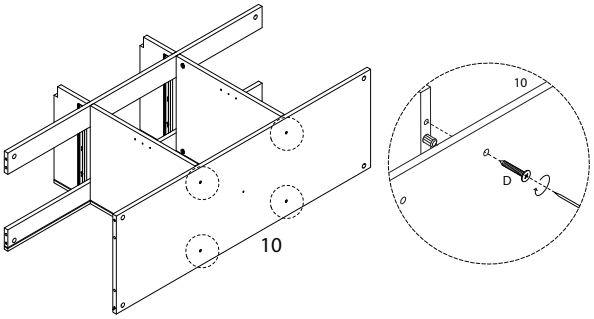

17

12
x 2

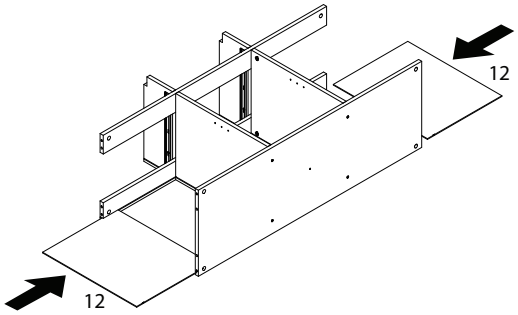

18

20	N
x 1	x 1

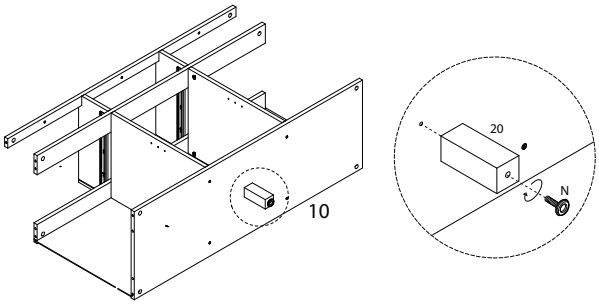

19

7
x 1

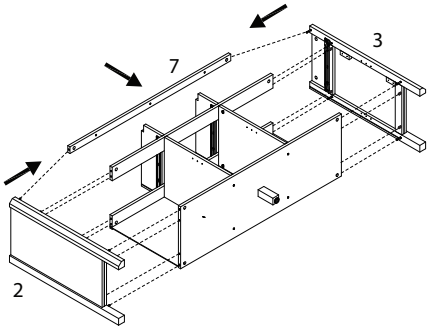

20

C
x 10

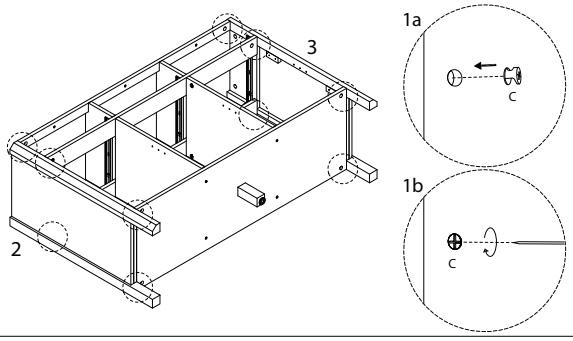

21

11
x 3

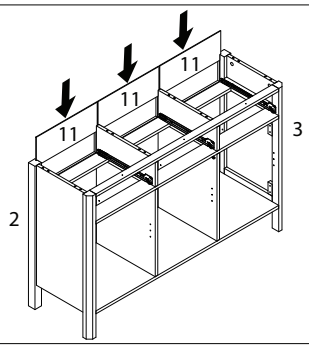

22

1	A	B
x 1	x 8	M8 x 30 x 8

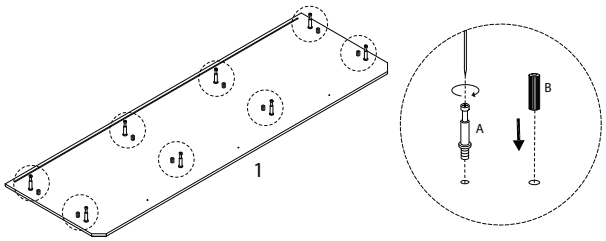

23

C

x 8

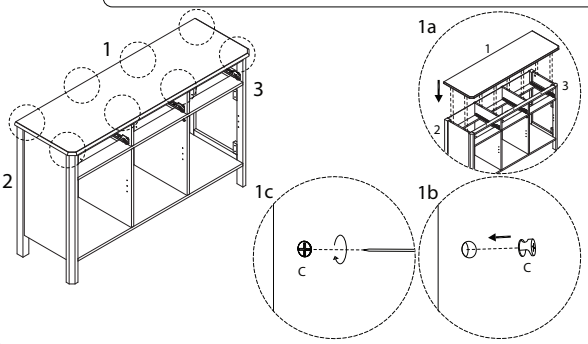

24

P

M4 x 25

x 3

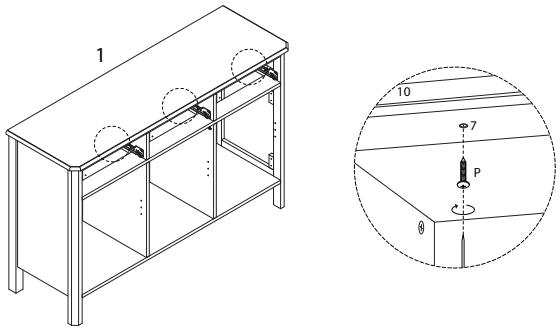

25 x 3

13	E	F
x 1	M4 x 14 x 4	x 2

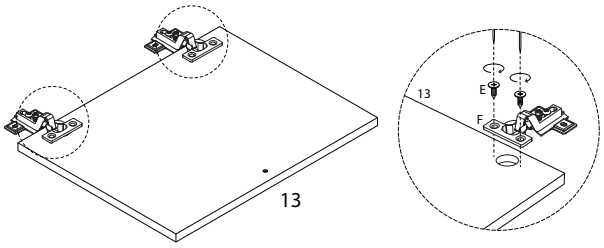

26 x 3

G	H
M4 x 20 x 1	x 1

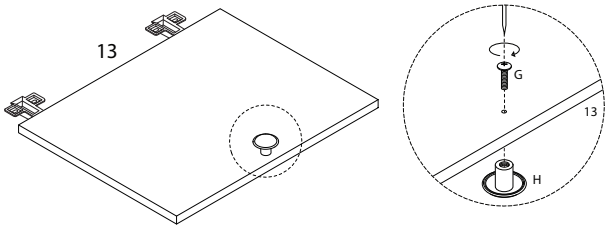

27

E

M4 x 14

x 2

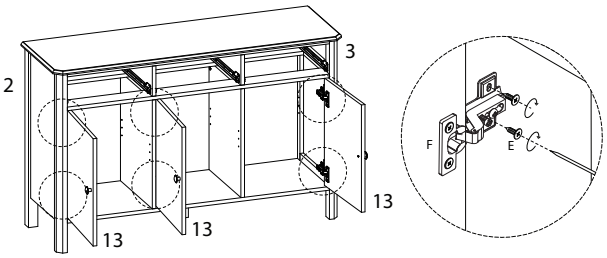

28

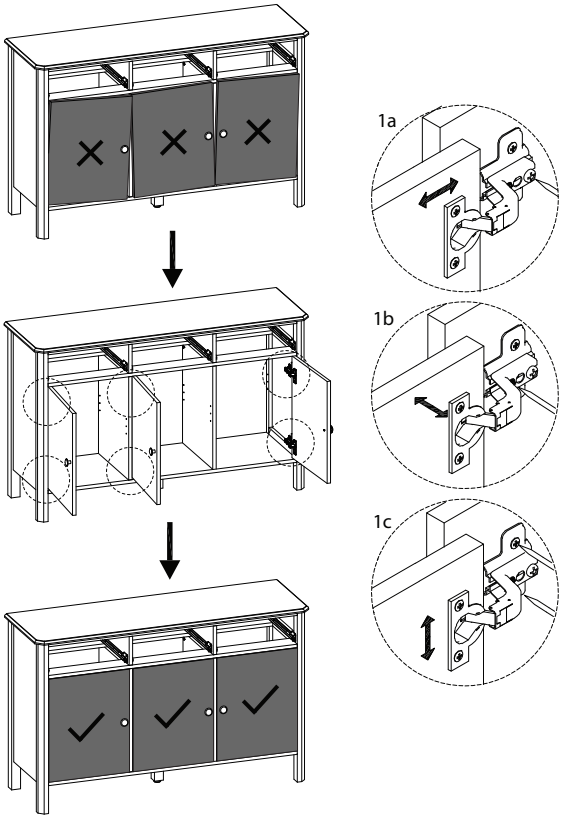

29

M

x 12

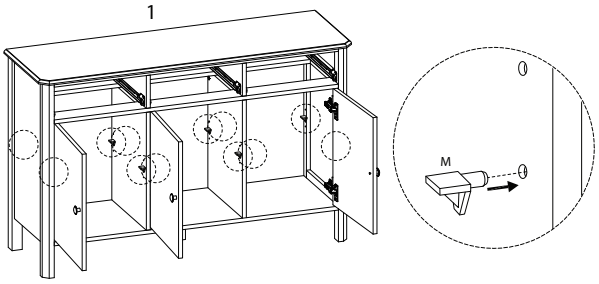

30

14

x 3

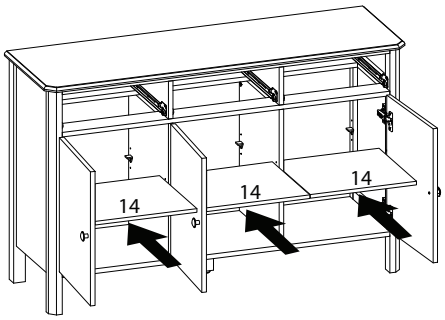

31

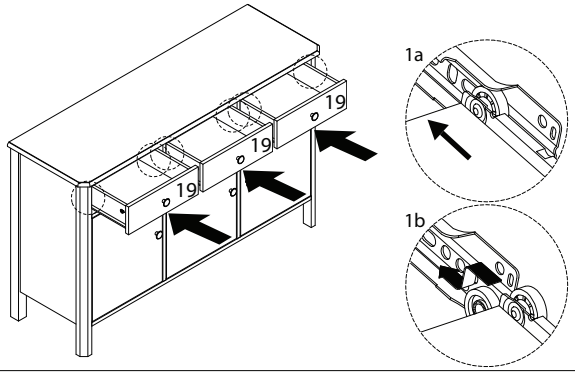

32

Q1	Q2
x 2	x 2

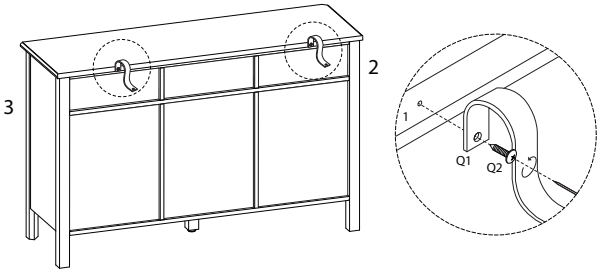

33
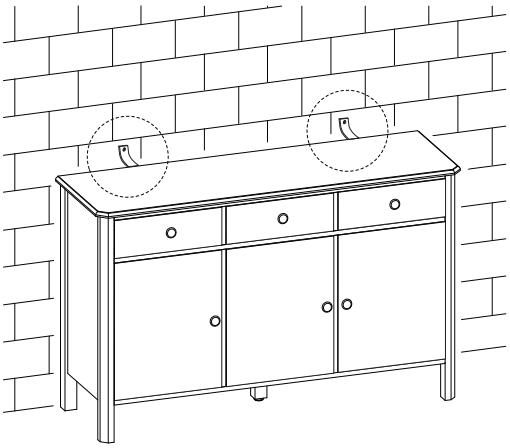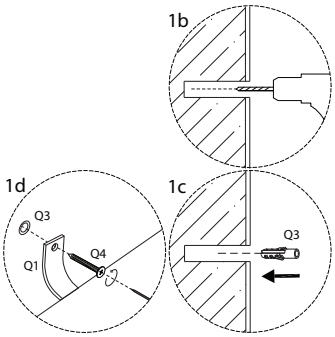
Q3	Q4
x 2	M4 x 40 x 2