DELARY

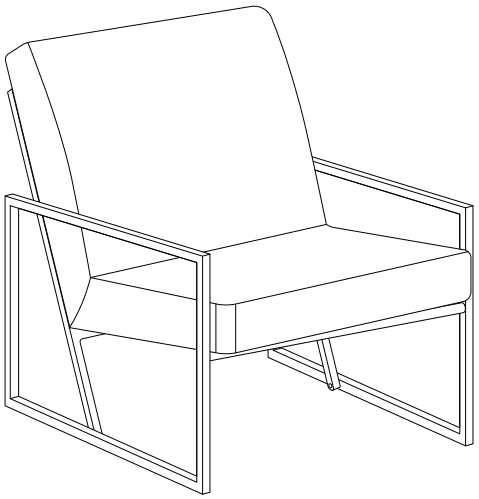

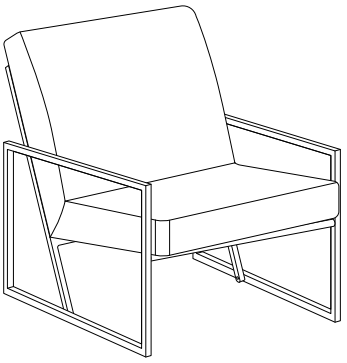

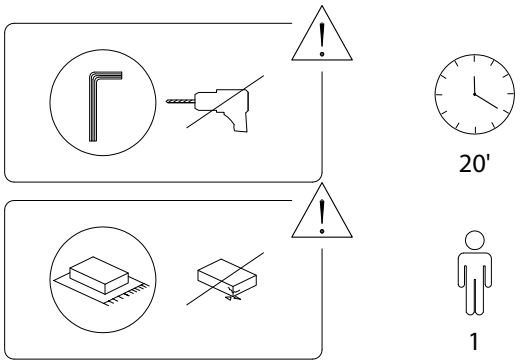

1/5

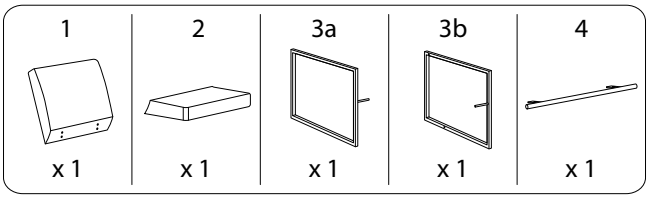

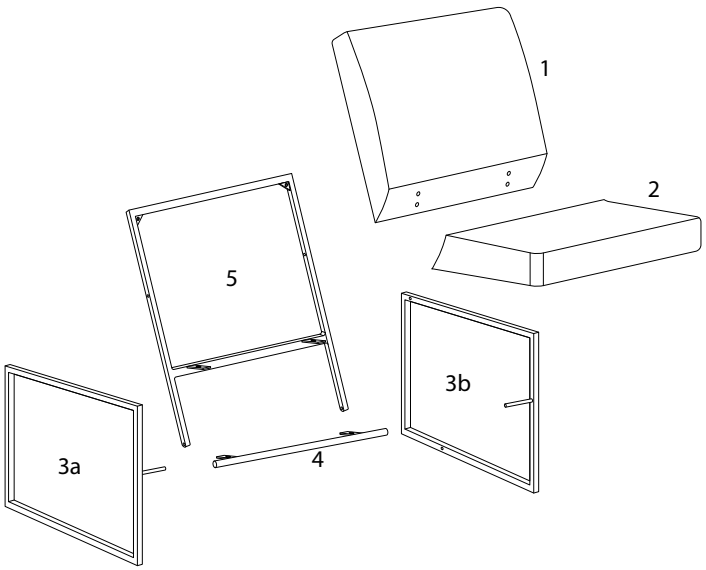

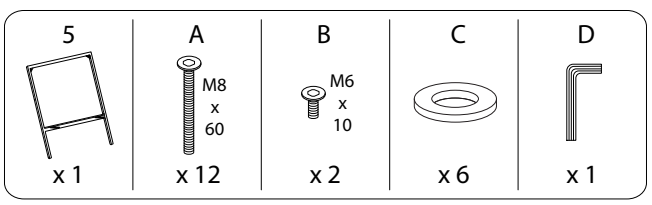

2/5

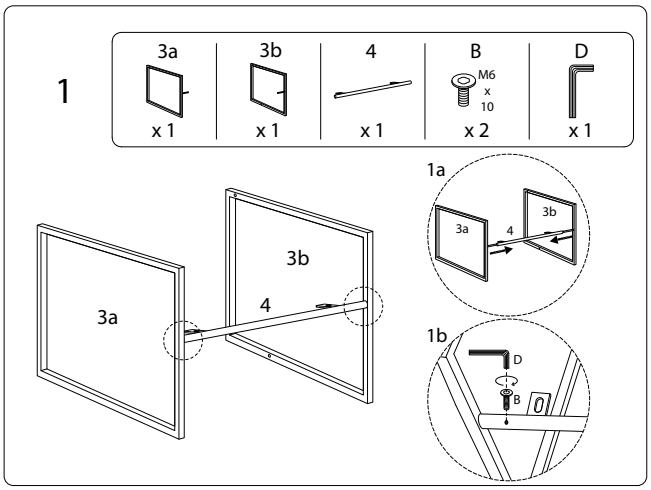

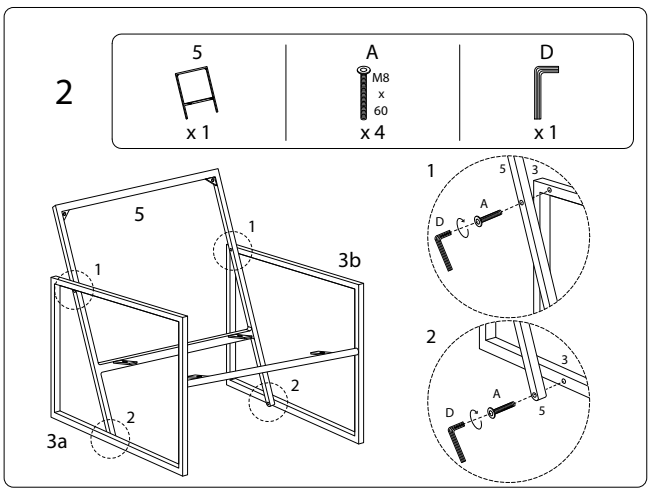

3/5

3

1	2	A	C	D
x 1	x 1	M8 x 60 x2	x 2	x 1

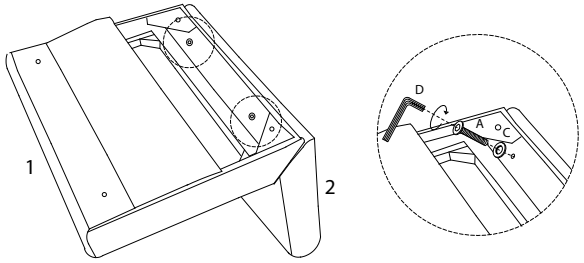

4

A	C	D
M8 x 60 x 4	x 4	x 1

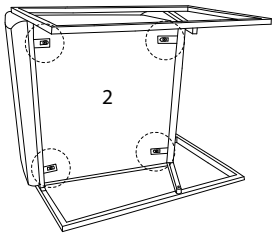

1a

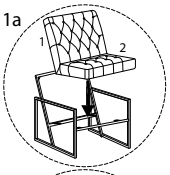

1b

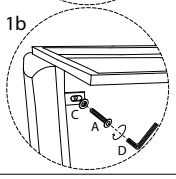

5

A	D
M8 x 60 x 2	x 1

