LAMBINA

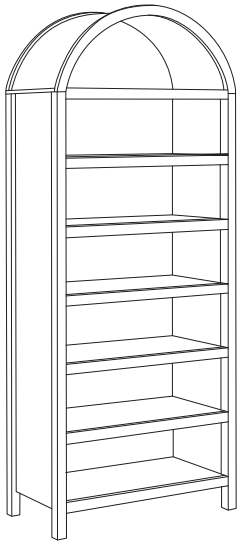

1/20

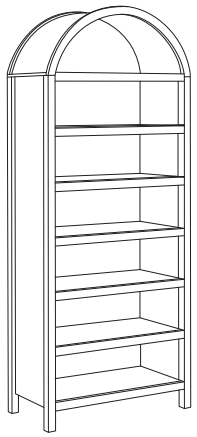

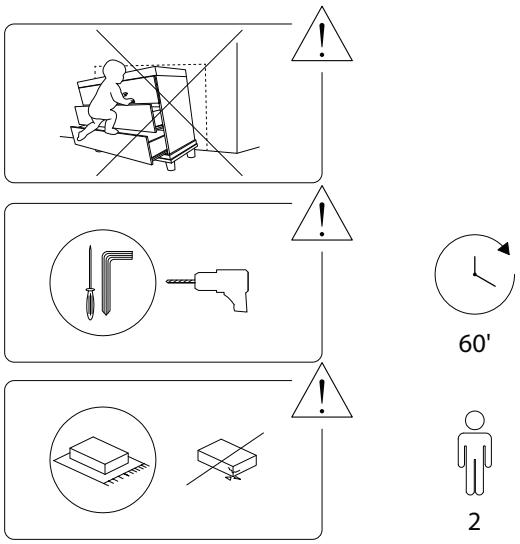

2/20

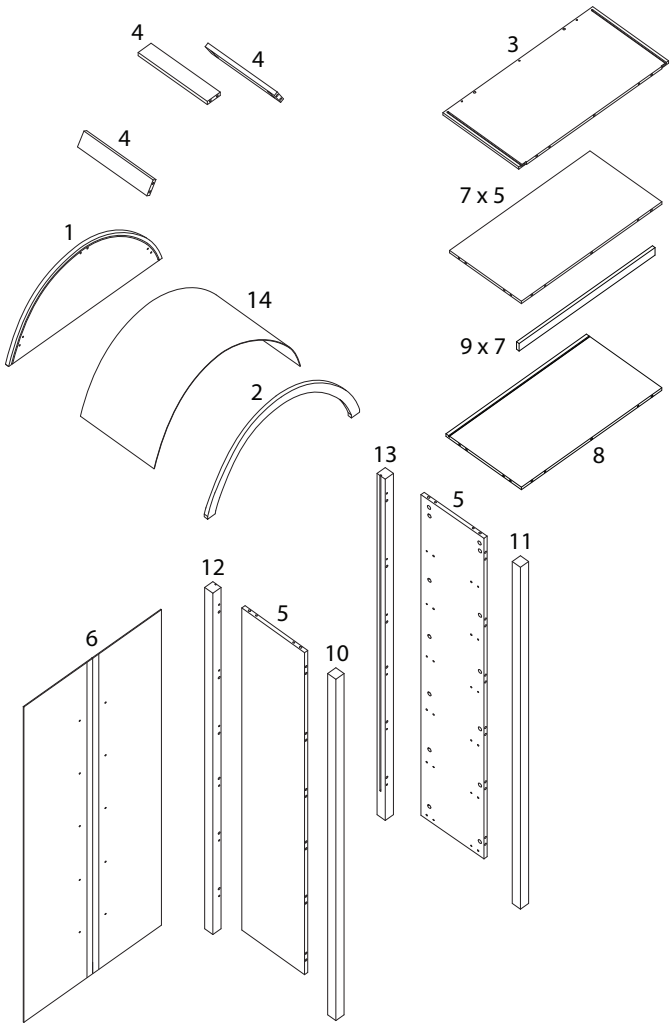

3/20

1 x 1	2 x 1	
3 x 1	4 x 3	5 x 2
6 x 1	7 x 5	8 x 1
9 x 7	10 x 1	11 x 1
12 x 1	13 x 1	14 x 1

4/20

A	B	C
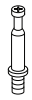		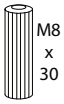 M8 x 30
x 90	x 90	x 30
D	**E**	**F**
 M4 x 35	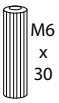 M6 x 30	 M3.5 x 14
x 2	x 38	x 10
G	**H**	**I**
		
x 40	x 1	x 10
J	**K**	**L**
 M4 x 12		
x 2	x 4	x 2
M	**N**	
	 M4 x 14	
x 2	x 10	

1

10	11	12	13	A
x 1	x 1	x 1	x 1	x 24

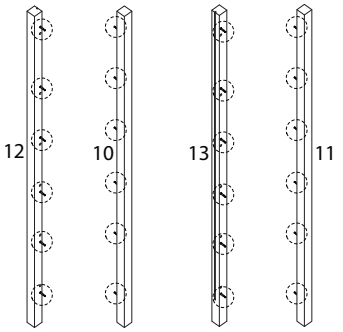

2 x 2

5	C
x 1	 M8 x 30 x 12

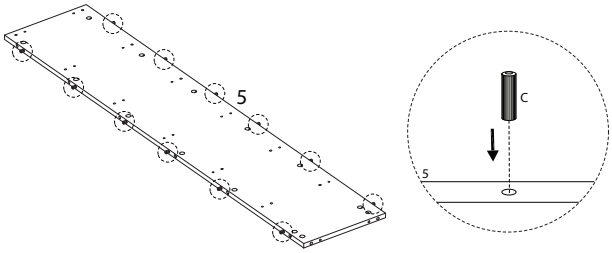

3

B	G
 x 24	 x 24

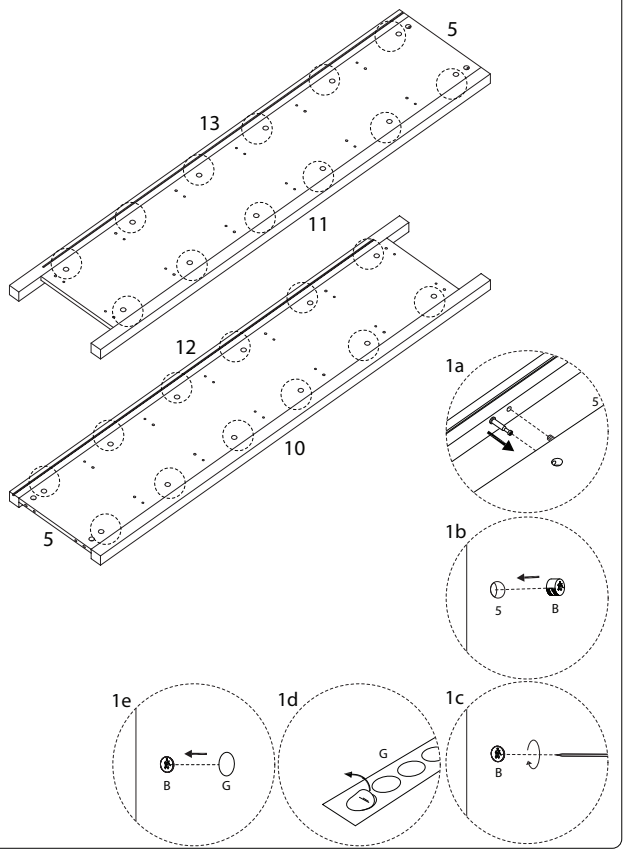

4

A	K
 x 24	 x 4

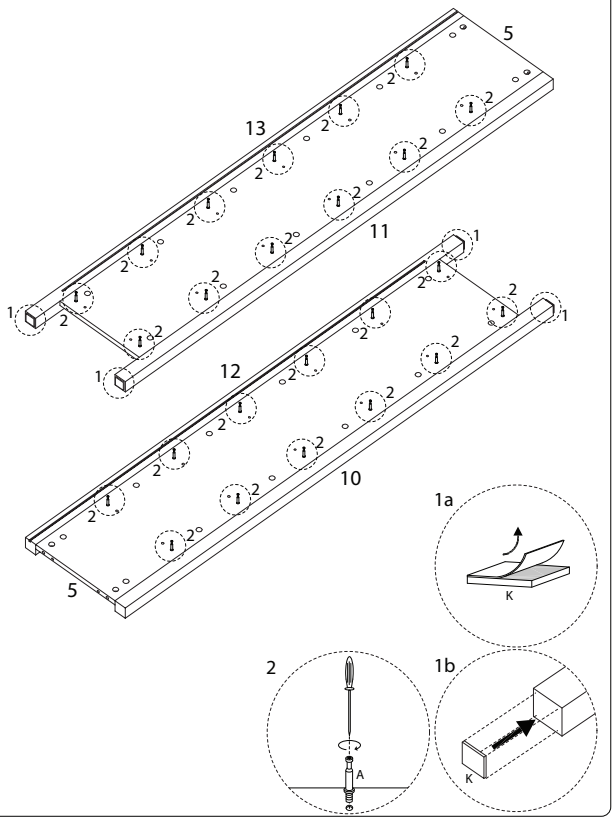

5 x 5

7 x1

E M6 x 30 x6

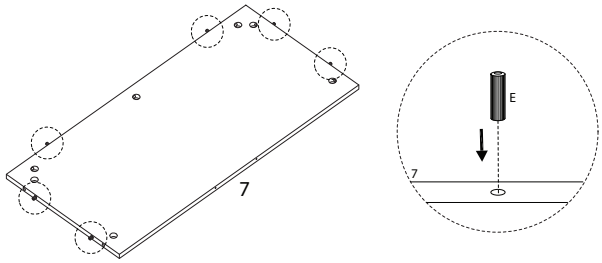

6

8 x1

E M6 x 30 x6

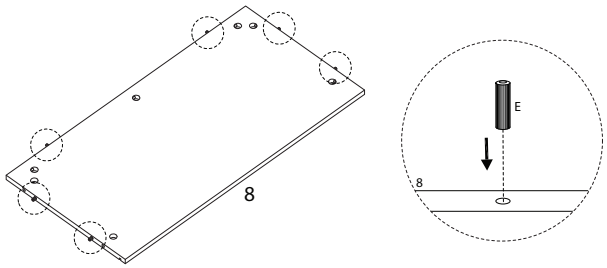

7 x 7

9 x1

A x3

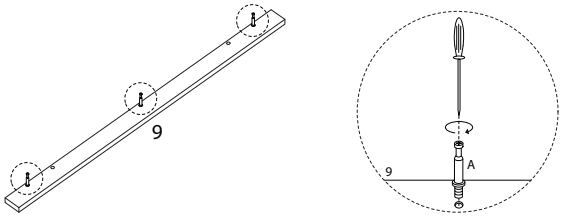

8

B x3

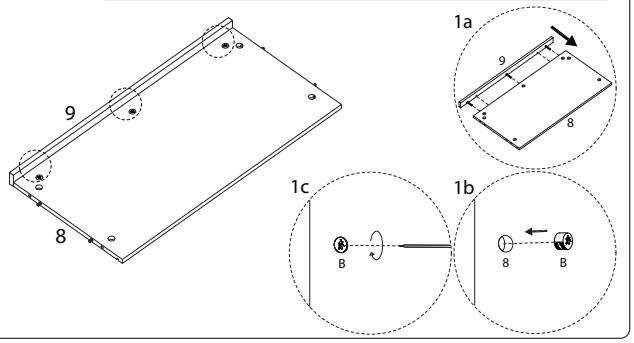

9 x 5

B x3

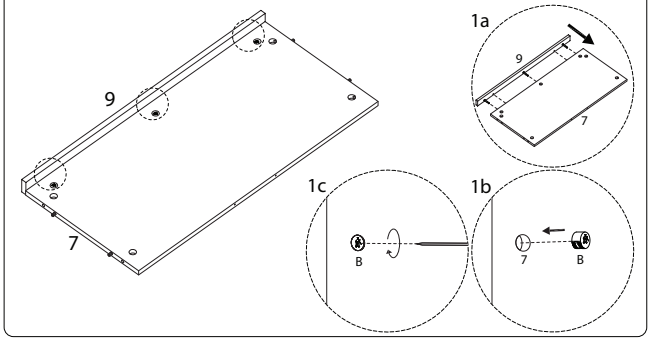

10

1 x1 | 2 x1 | 3 x1 | A x17 | E M6 x 30 x4

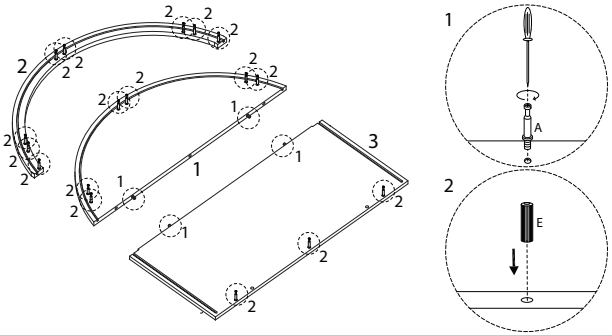

11

B x24

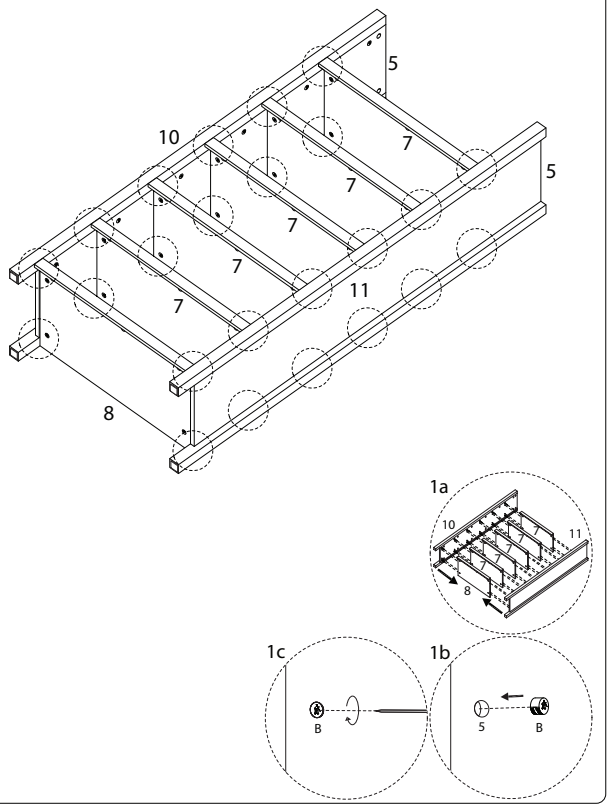

12

6 x 1

C M8 x 30 x 4

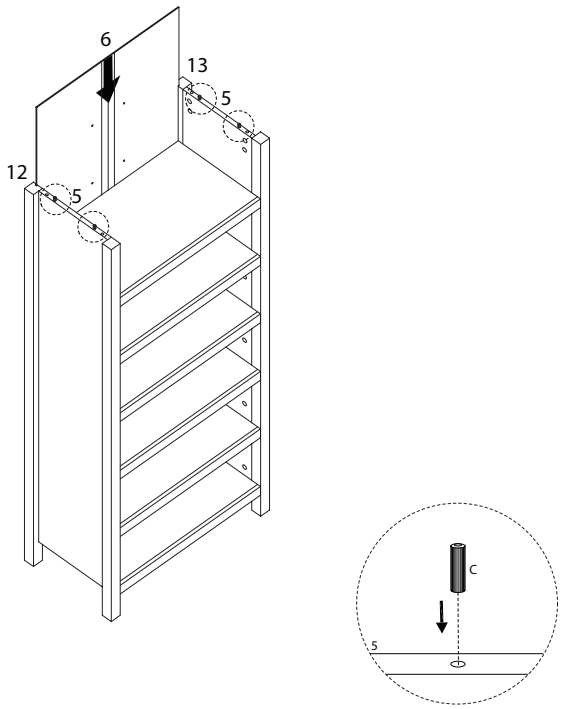

13

B x 3

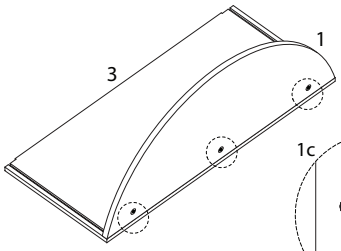

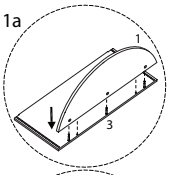

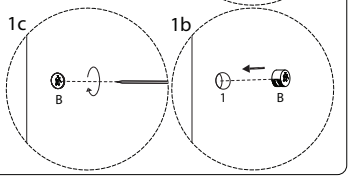

14

B x 3

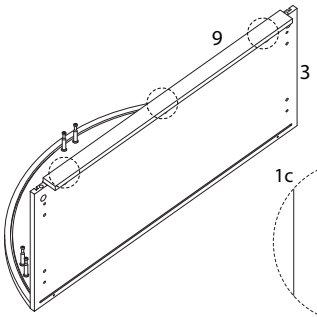

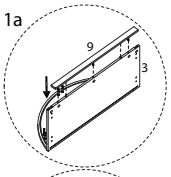

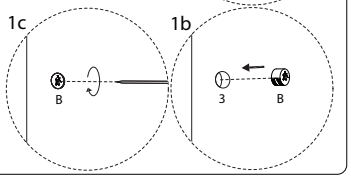

15

4 x 3

B x 6

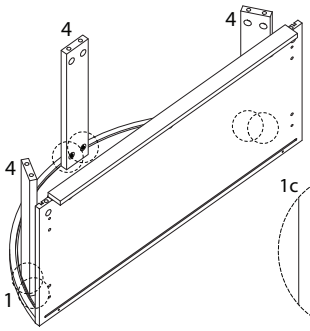

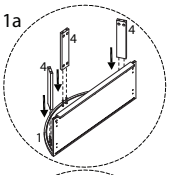

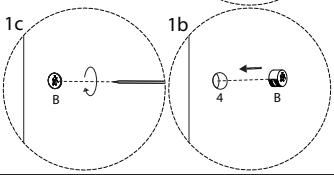

16

14 x 1

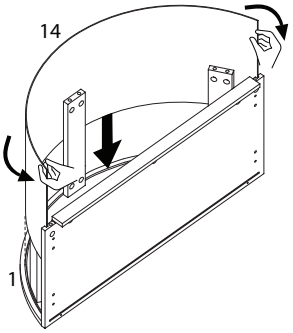

17

B x 8

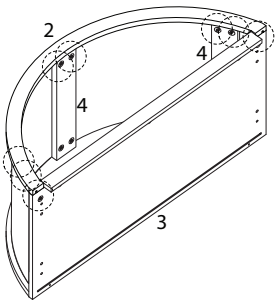

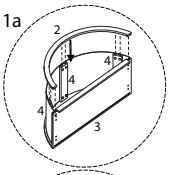

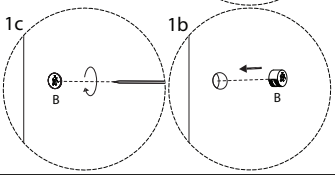

18

A x 4

G x 12

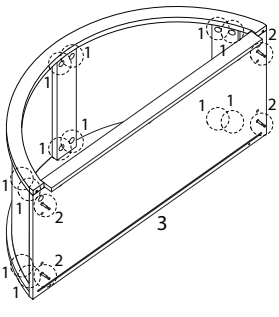

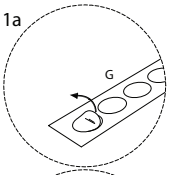

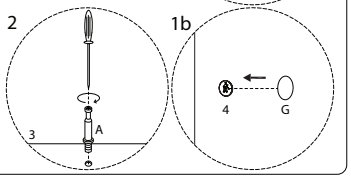

19

B	G
x 4	x 4

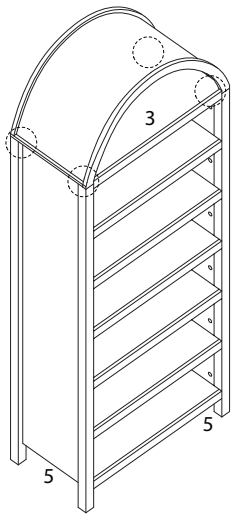

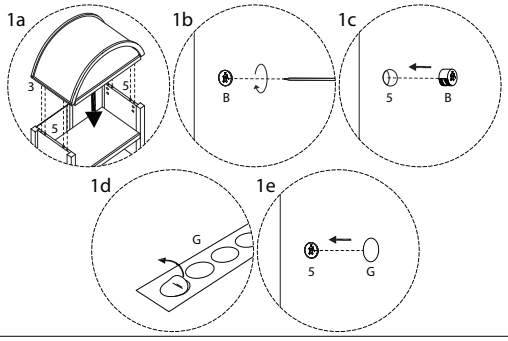

20

N
M4 x 14
x 10

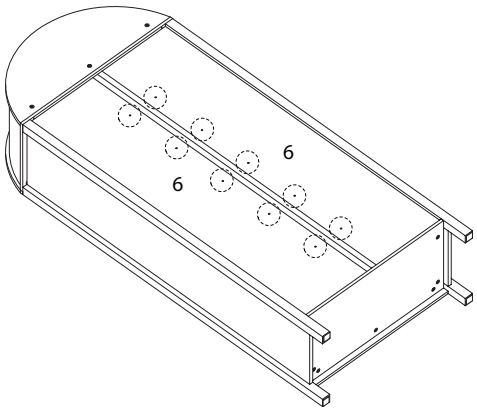

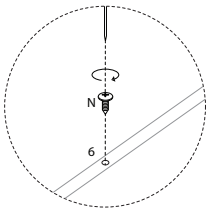

21

F	I	J	L
M3.5 x 14		M4 x 12	
x 10	x 10	x 2	x 2

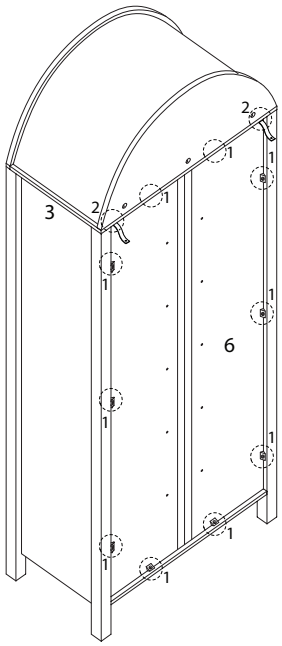

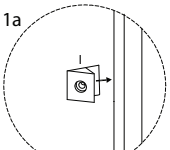

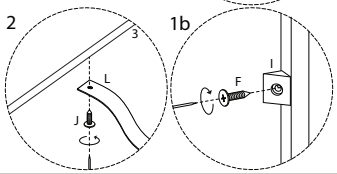

22

D	M
M4 x 35	
x 2	x 2

