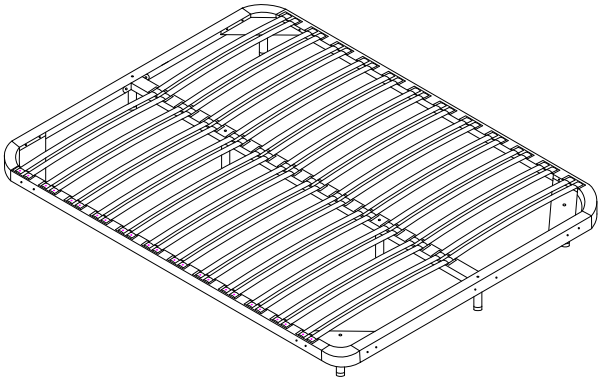

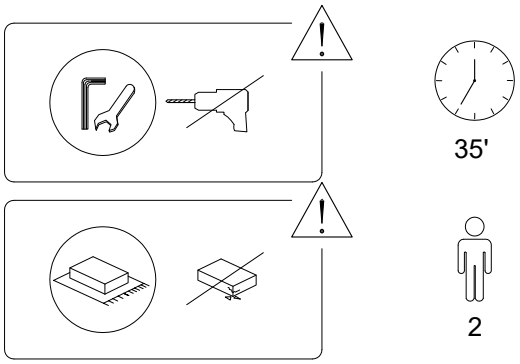

1/5

A	B	C	D	E
x 2	x 2	x 1	x 4	x 4

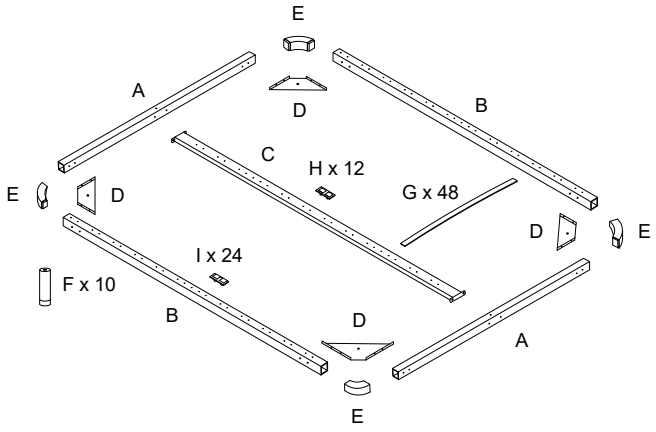

F	G	H	I	J
x 10	x 48	x 12	x 24	x 20

K	L	M	N	O
M8 x 50	M8 x 40	M8 x 25		
x 6	x 20	x 4	x 1	x 1

2/5

1

A	B	D	E
x 2	x 2	x 4	x 4

J	L	N	O
x 16	M8 x 40 x 16	x 1	x 1

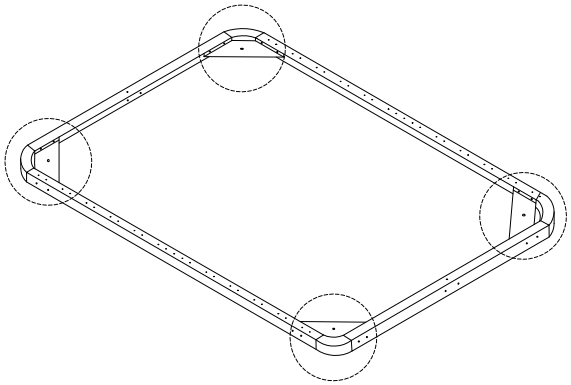

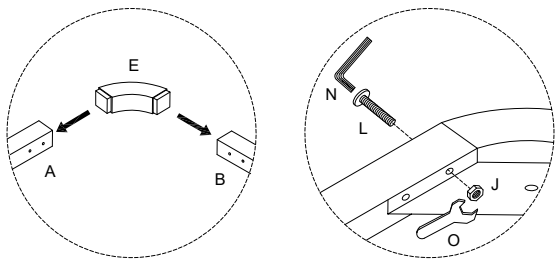

3/5

2

C	J	L	N	O
x 1	x 4	M8 x 40 x 4	x 1	x 1

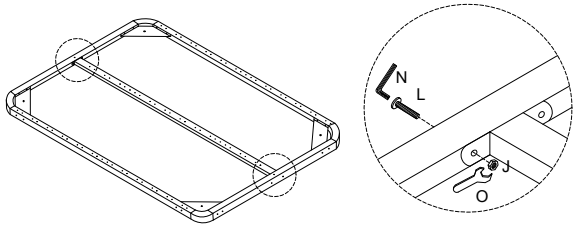

3

F	K	M	N
x 10	M8 x 50 x 6	M8 x 25 x 4	x 1

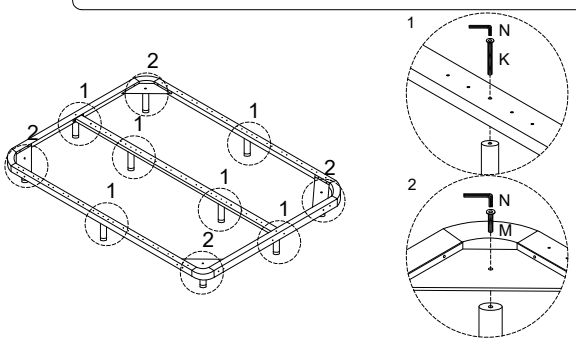

4/5

4

G	H	I
x 48	x 12	x 24

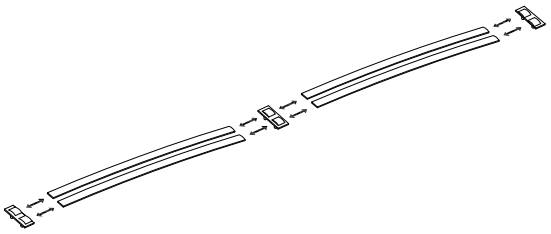

5

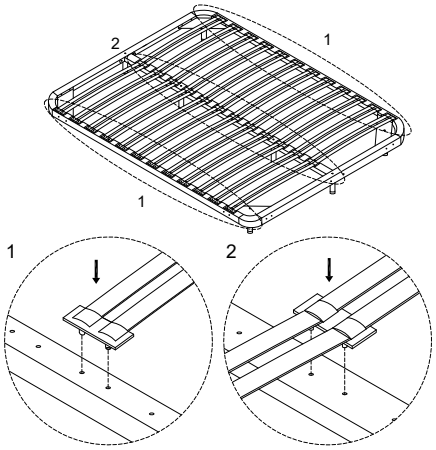

158/BASIC.L/061218/