GLASTONBURY

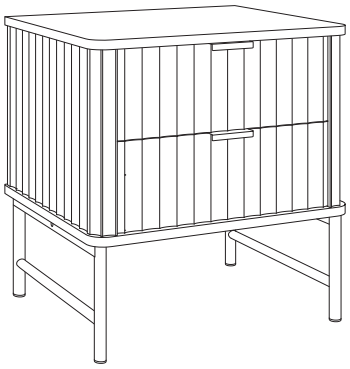

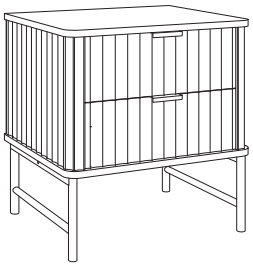

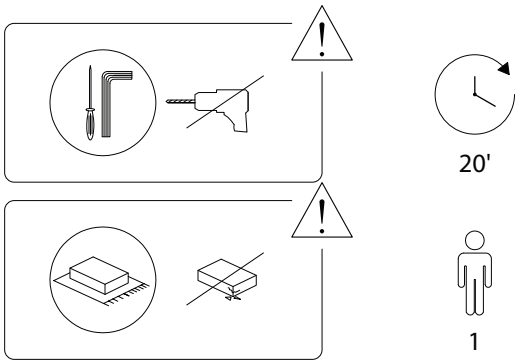

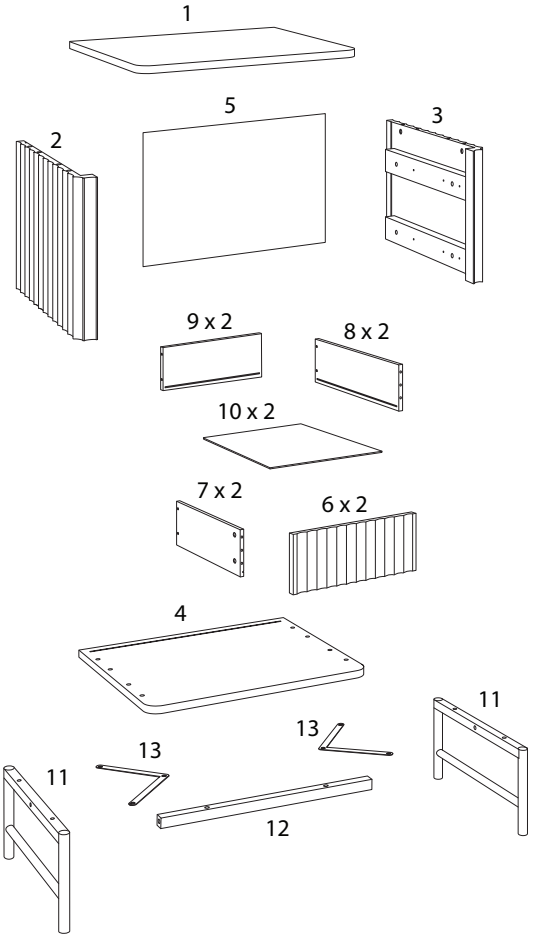

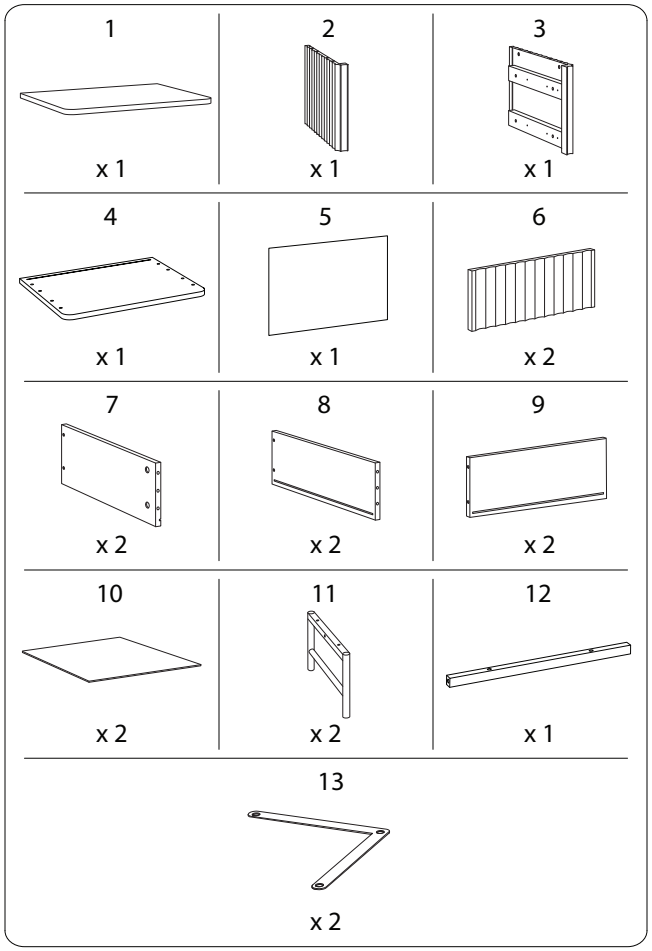

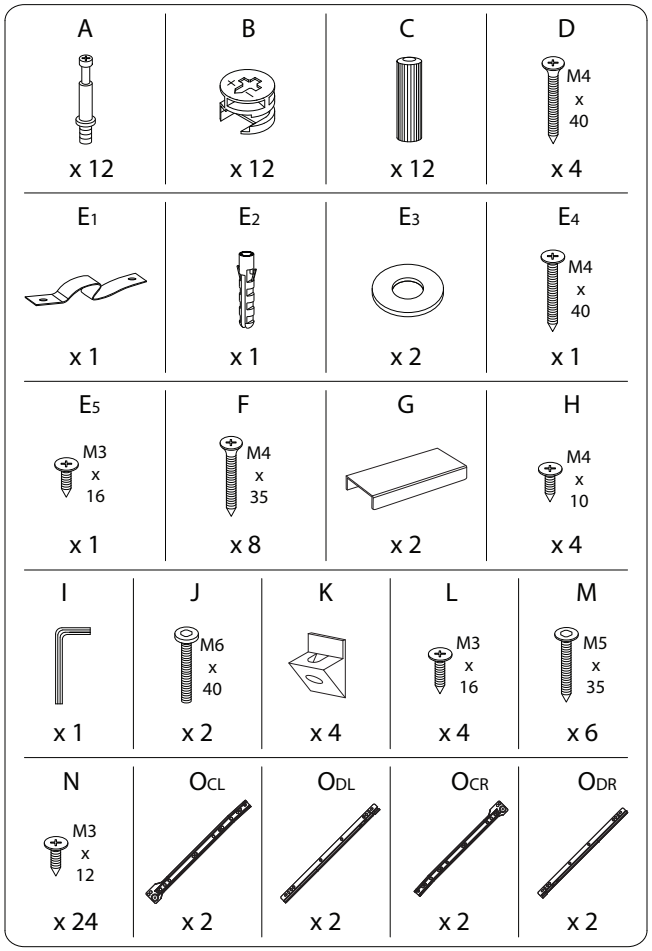
A
x 12
B
x 12
C
x 12
D
M4 x 40
x 4
E1
x 1
E2
x 1
E3
x 2
E4
M4 x 40
x 1
E5
M3 x 16
x 1
F
M4 x 35
x 8
G
x 2
H
M4 x 10
x 4
I
x 1
J
M6 x 40
x 2
K
x 4
L
M3 x 16
x 4
M
M5 x 35
x 6
N
M3 x 12
x 24
OCL
x 2
ODL
x 2
OCR
x 2
ODR
x 2

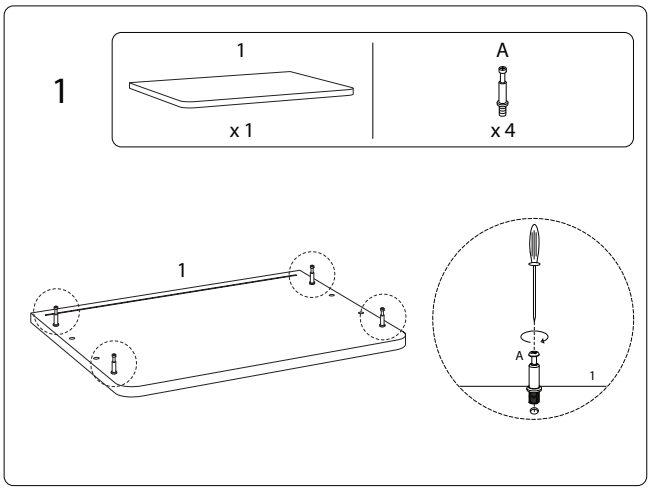
1
1
x 1
A
x 4
1
A
1

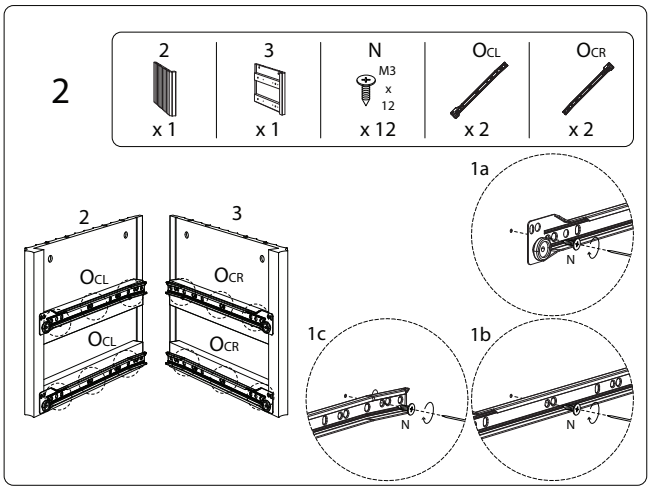
2
x 1
3
x 1
N
M3 x 12
x 12
OCL
x 2
OCR
x 2
1a
2
3
OCL
OCL
OCR
OCR
1c
1b
N
N
N

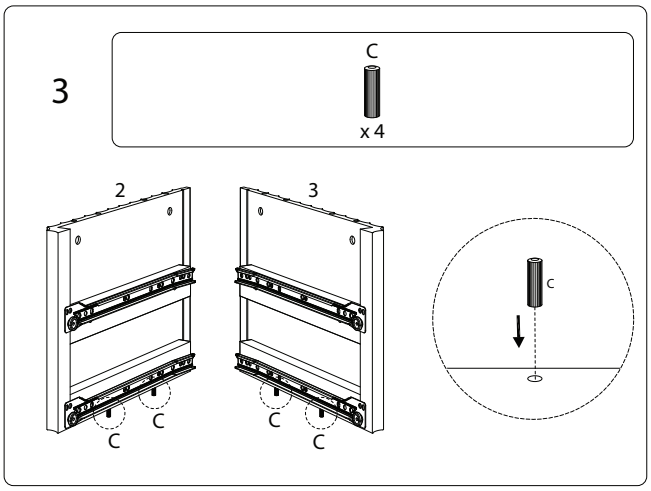
3
C
x 4
2
3
C
C
C
C
C

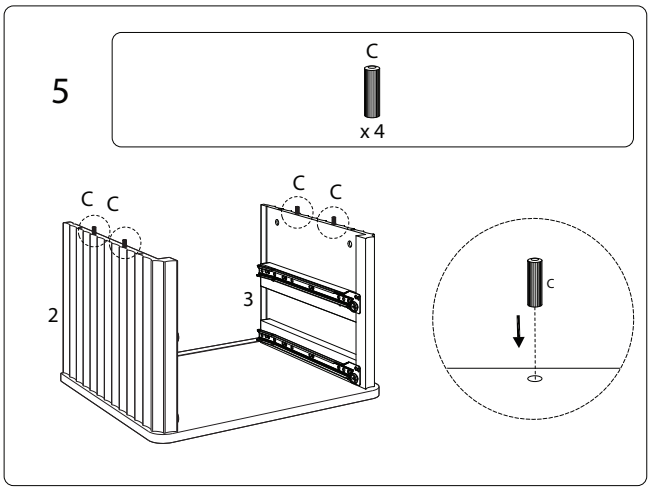
5
C
x 4
C
C
C
C
2
3
C

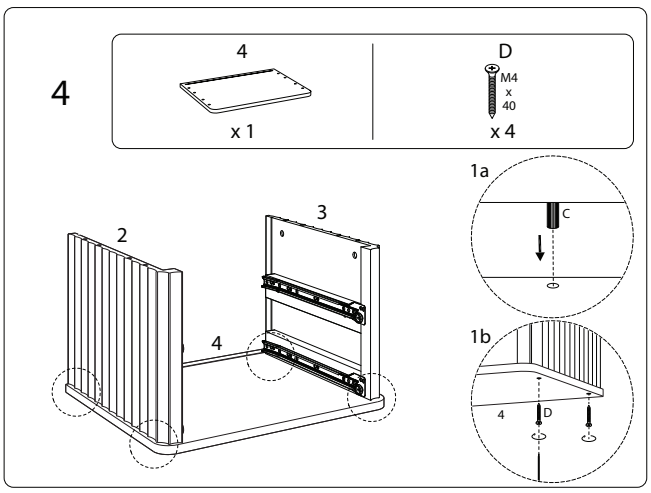
4
4
x 1
D
M4 x 40
x 4
1a
C
2
3
4
1b
4
D

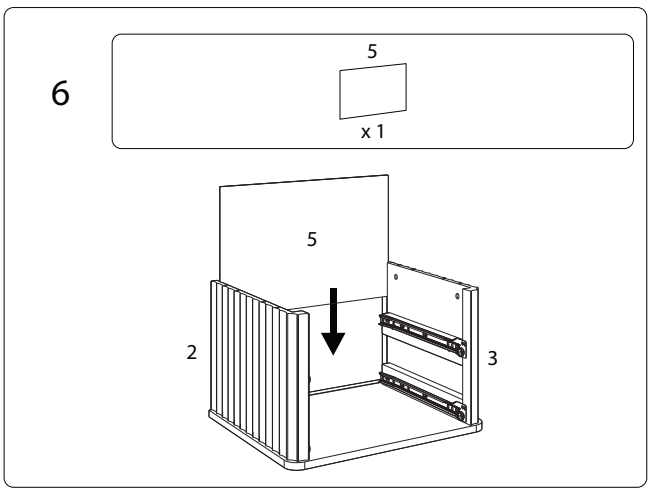
6
5
x 1
5
2
3

7

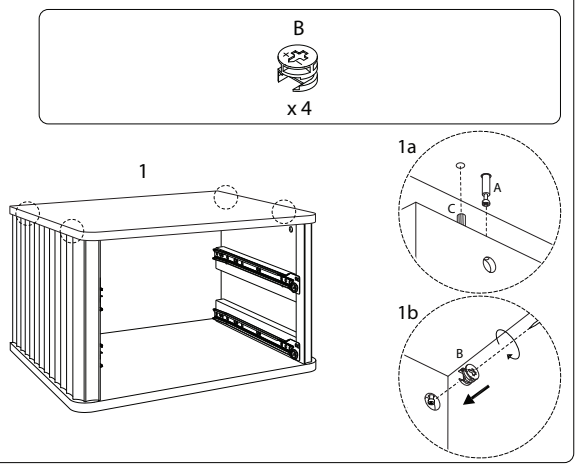

8

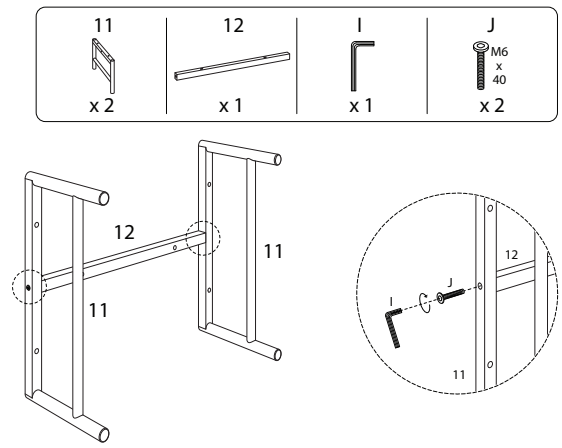

9

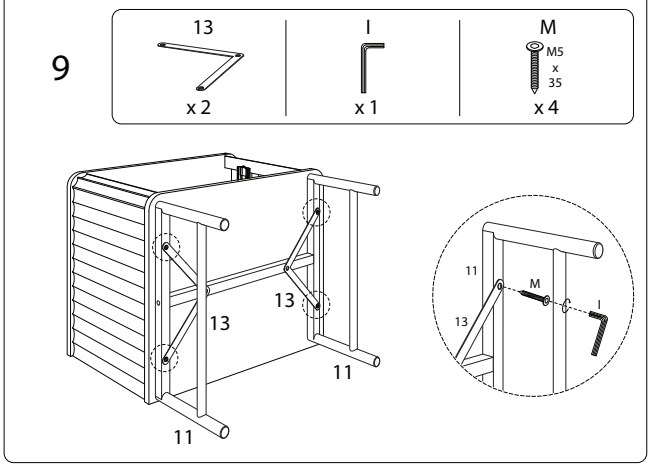

10

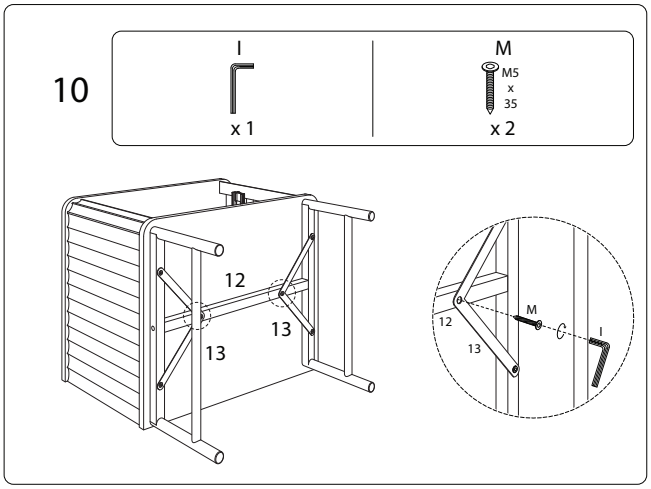

11 x 2

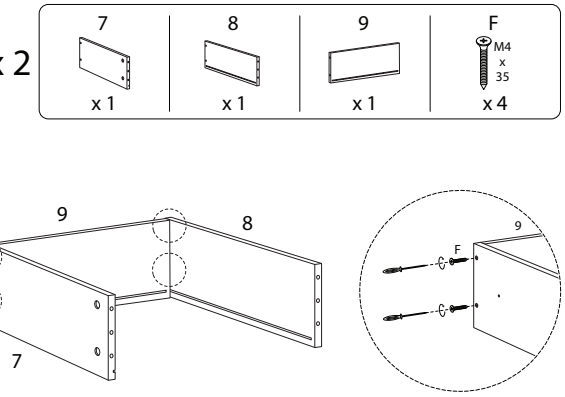

12 x 2

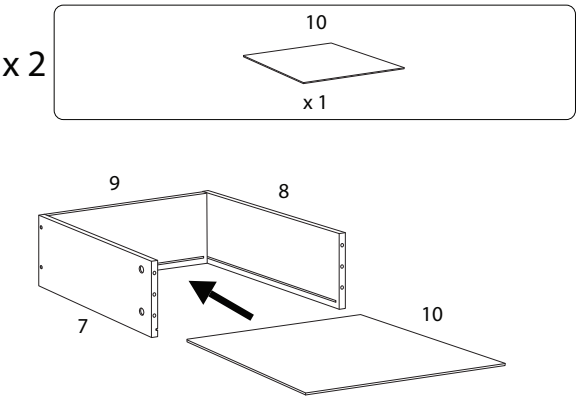

13 x 2

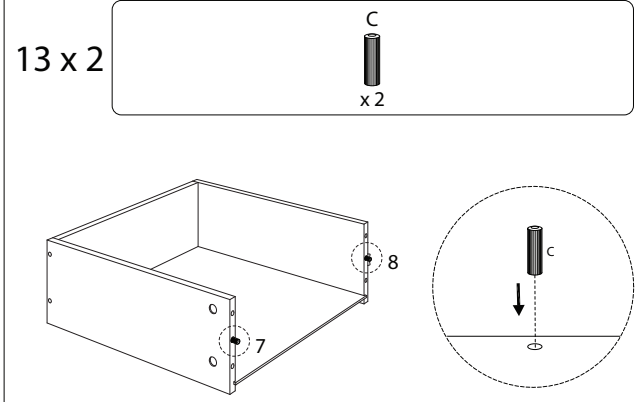

14 x 2

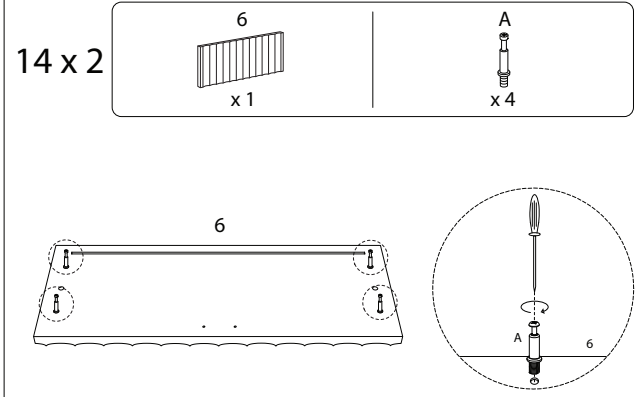

15 x 2

B
x 4

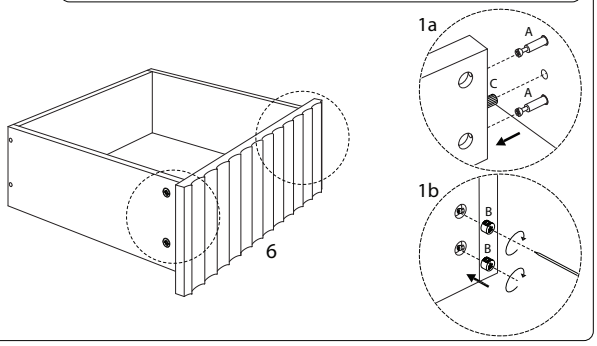

16 x 2

G	H
x 1	M4 x 10 x 2

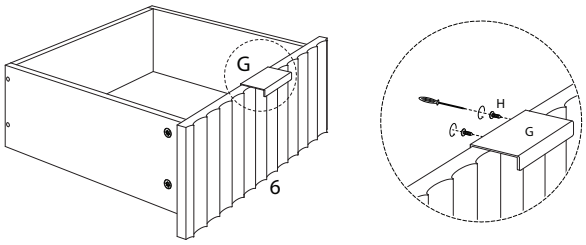

17 x 2

O_{DL}	O_{DR}	N
x 2	x 2	M3 x 12 x 6

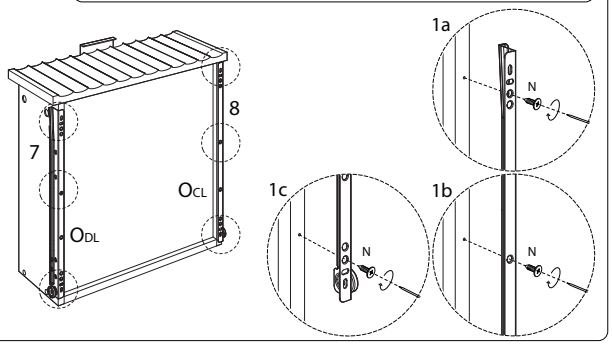

18

K	L
x 4	M3 x 16 x 4

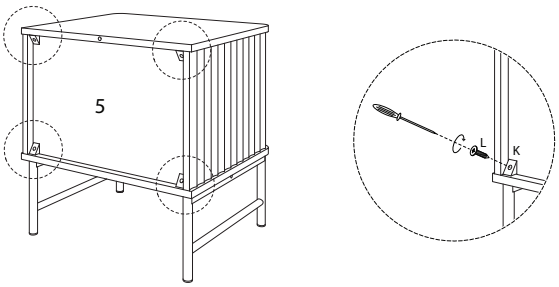

19

E_1	E_3	E_5
x 1	x 1	M3 x 16 x 1

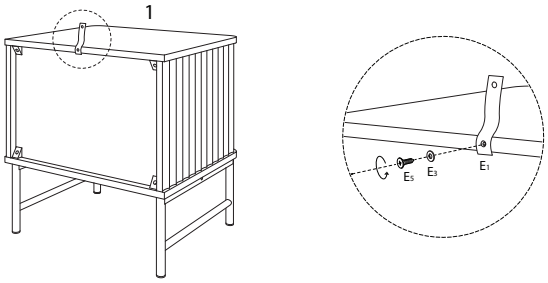

20

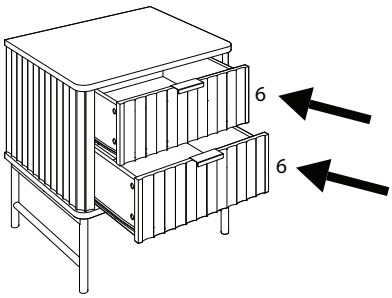

21

E_2
x 1

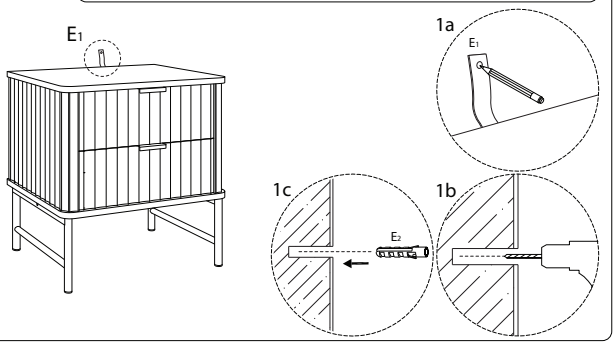

22
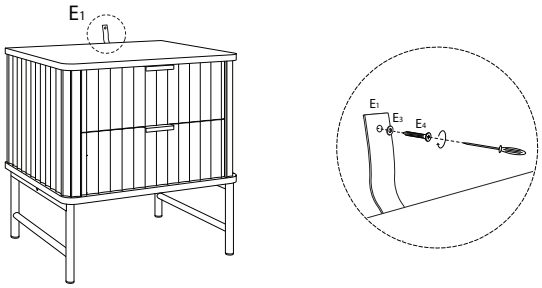
E_3	E_4
x 1	M4 x 40 x 1