CHULA

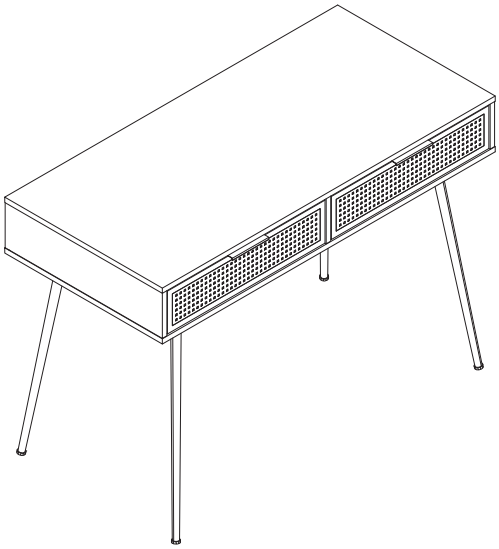

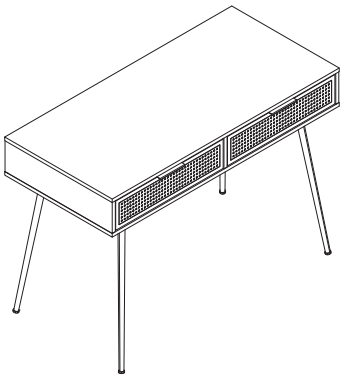

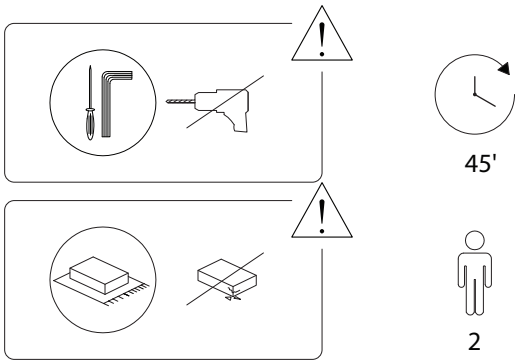

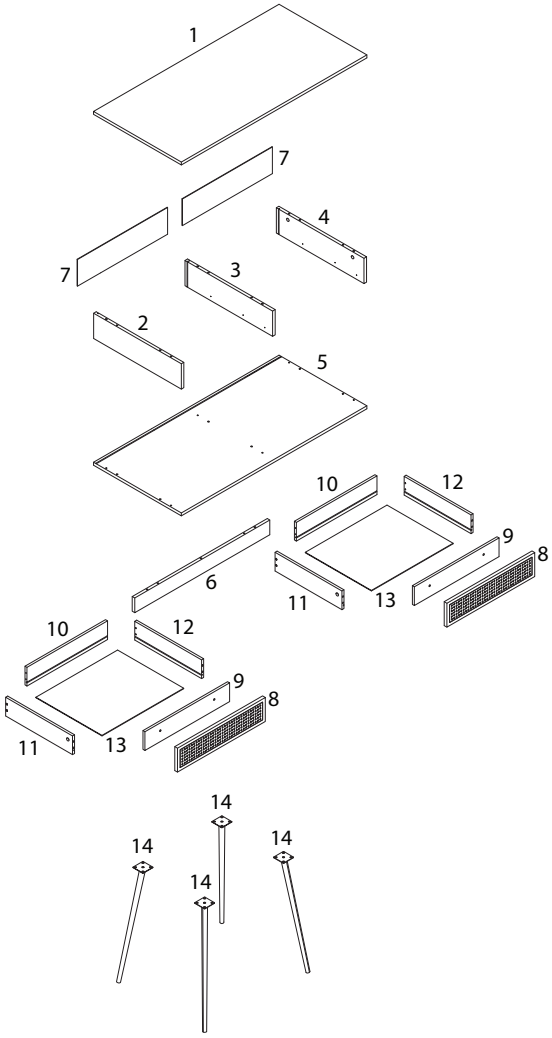

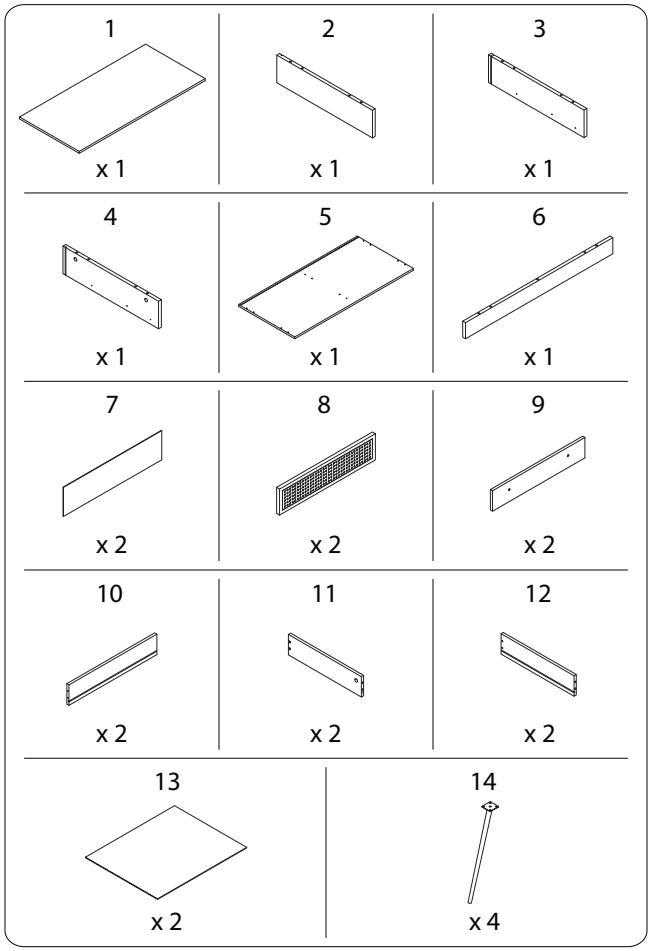

2788/CHULA/230426/

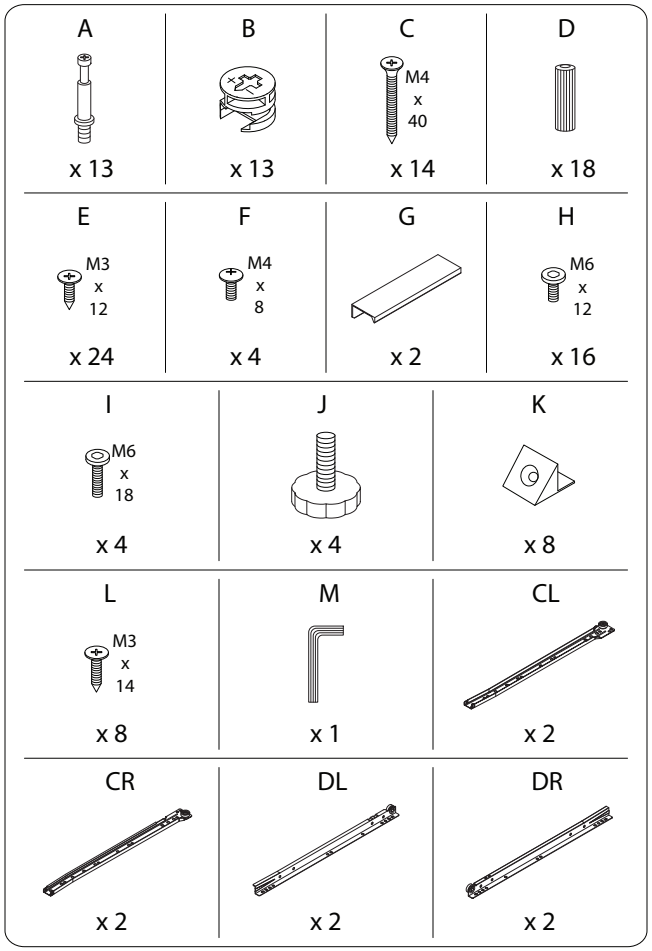
A
x 13
B
x 13
C
M4 x 40
x 14
D
x 18
E
M3 x 12
x 24
F
M4 x 8
x 4
G
x 2
H
M6 x 12
x 16
I
M6 x 18
x 4
J
x 4
K
x 8
L
M3 x 14
x 8
M
x 1
CL
x 2
CR
x 2
DL
x 2
DR
x 2

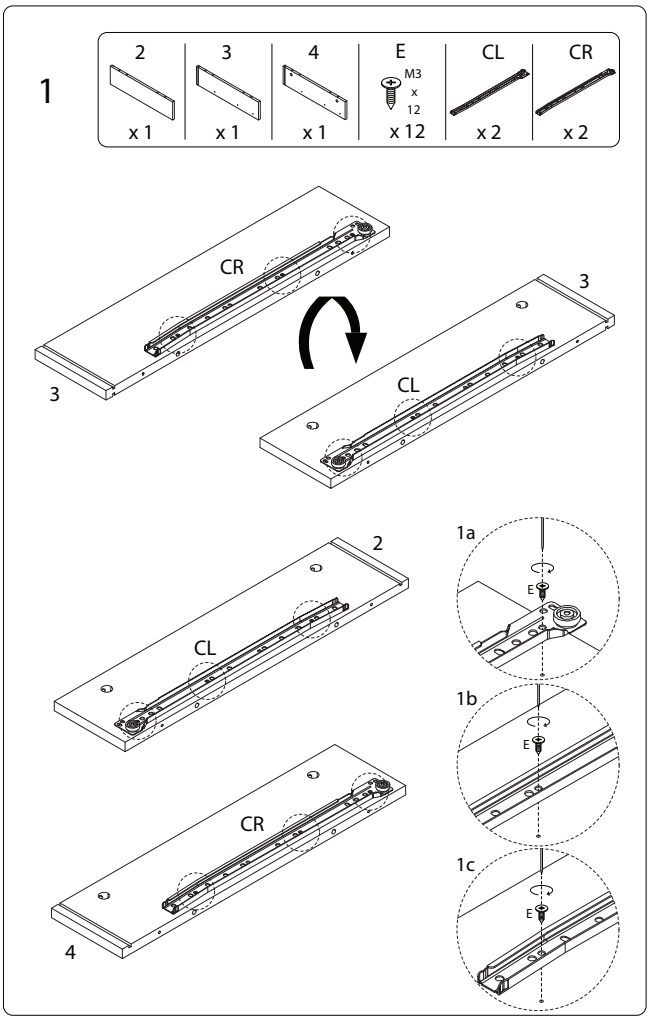
1
2 x 1
3 x 1
4 x 1
E M3 x 12 x 12
CL x 2
CR x 2
CR
3
3
CL
2
CL
1a
E
1b
E
CR
4
1c
E

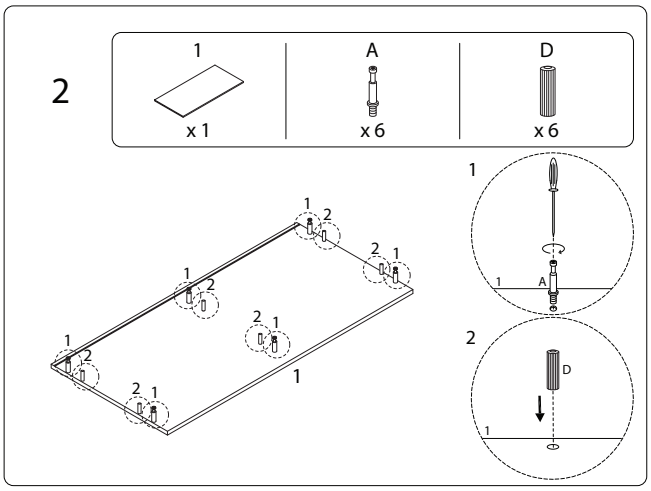
2
1 x 1
A x 6
D x 6
1
2
1
A
D

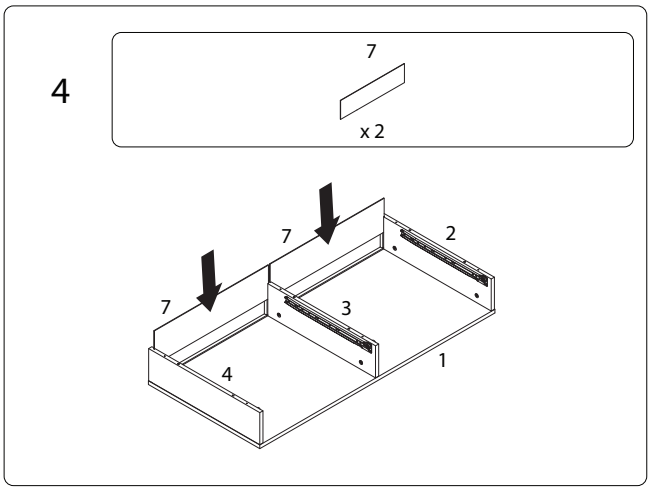
4
7 x 2
7
2
7
3
4
1

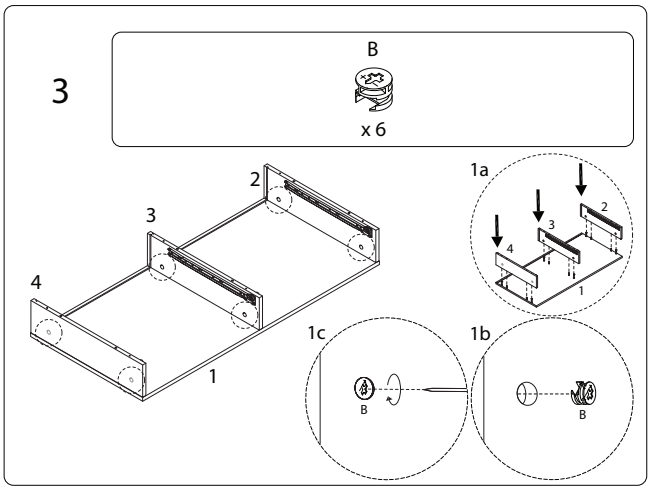
3
B x 6
2
3
4
1
1a
2
3
4
1
1c
B
1b
B

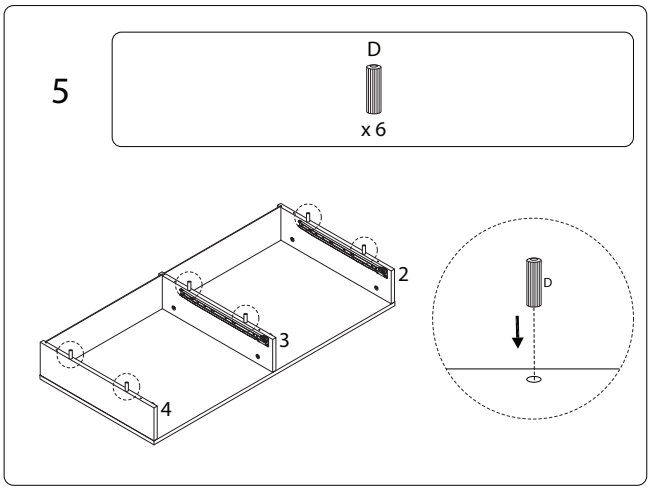
5
D x 6
2
3
4
D

6

5	C
x 1	M4 x 40 x 6

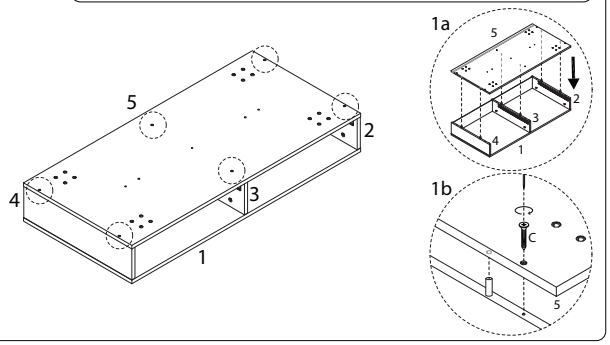

7

A	D
x 3	x 2

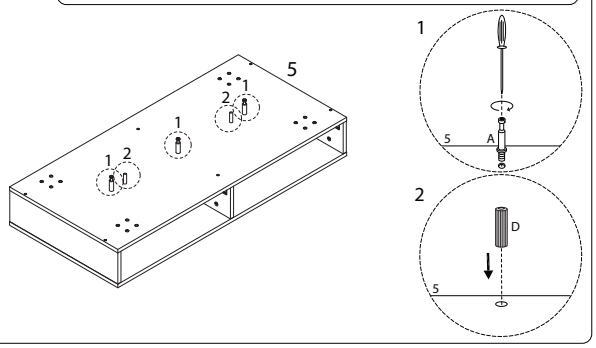

2788/CHULA/230426/

8

6	B
x 1	x 3

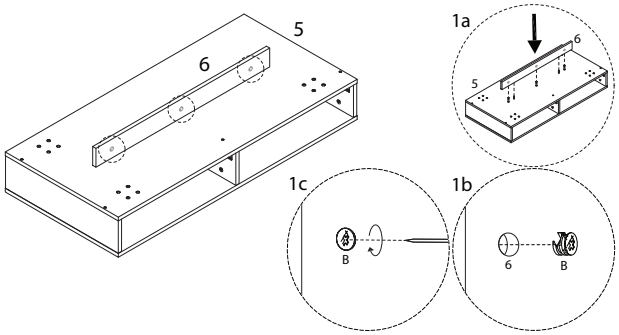

9

14	H	M
x 4	M6 x 12 x 16	x 1

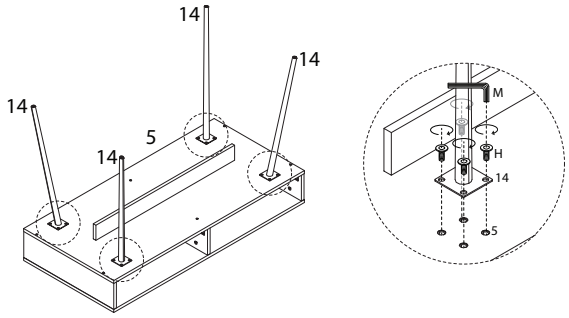

2788/CHULA/230426/

10

J
x 4

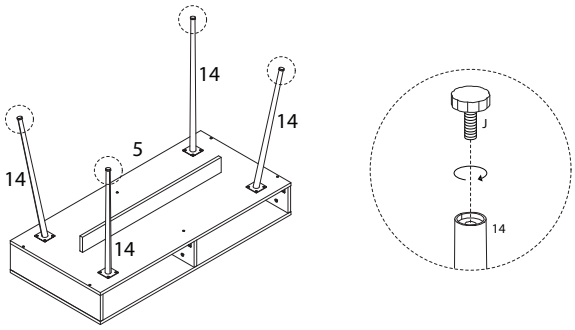

12 x 2

13
x 1

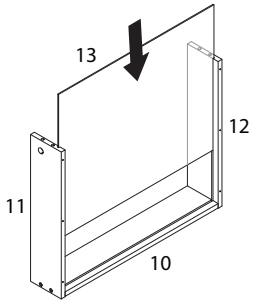

11 x 2

10	11	12	C
x 1	x 1	x 1	M4 x 40 x 4

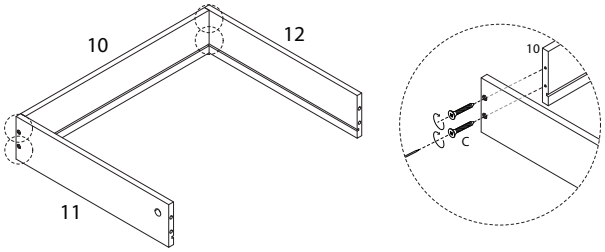

2788/CHULA/230426/

13 x 2

D
x 2

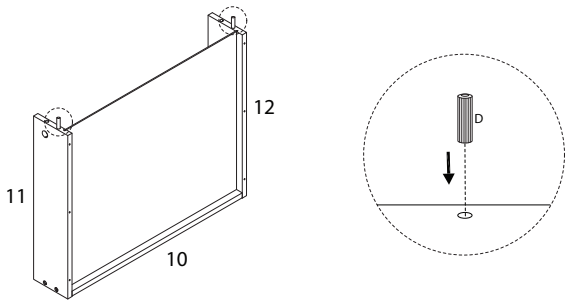

2788/CHULA/230426/

14 x 2

8	9	I	M
x 1	x 1	M6 x 18 x 2	x 1

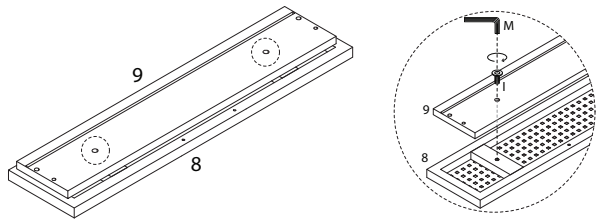

15 x 2

A	F	G
x 2	M4 x 8 x 2	x 1

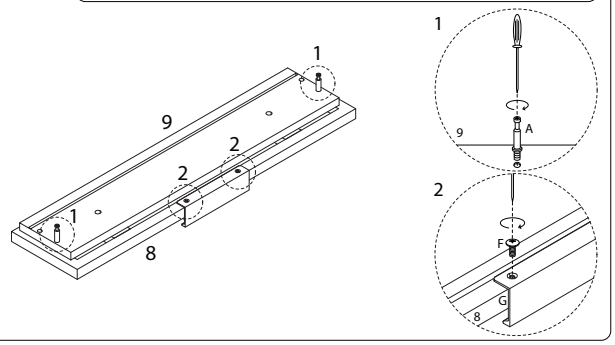

2788/CHULA/230426/

16 x 2

B
x 2

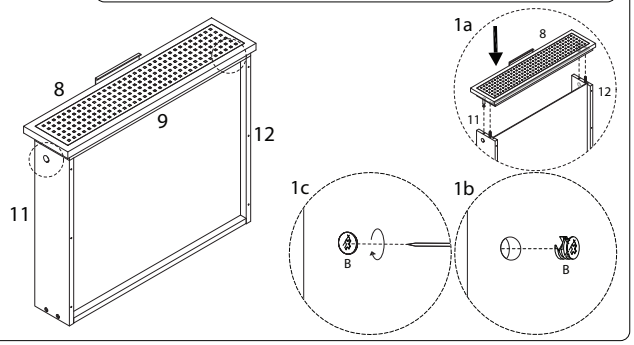

17 x 2

DL	DR	E
x 1	x 1	M3 x 12 x 6

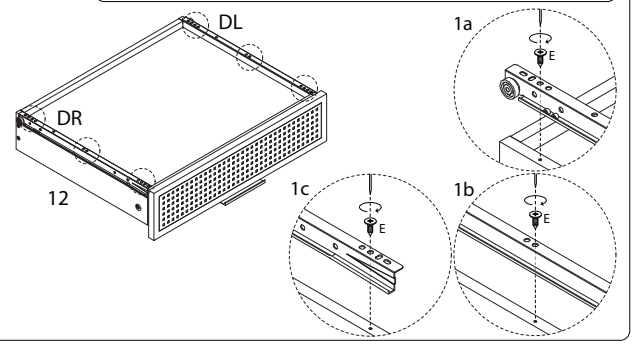

2788/CHULA/230426/

18

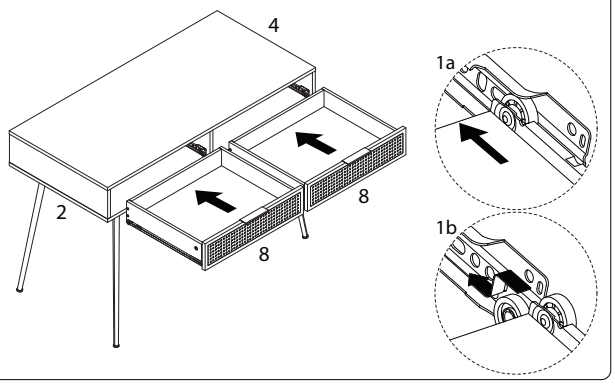

19

K	L
x 8	M3 x 14 x 8

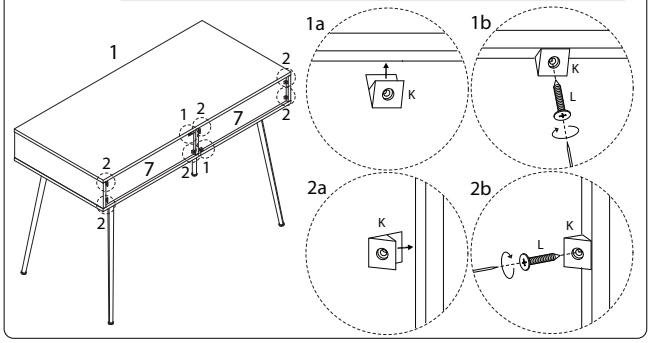

2788/CHULA/230426/