ORBEY

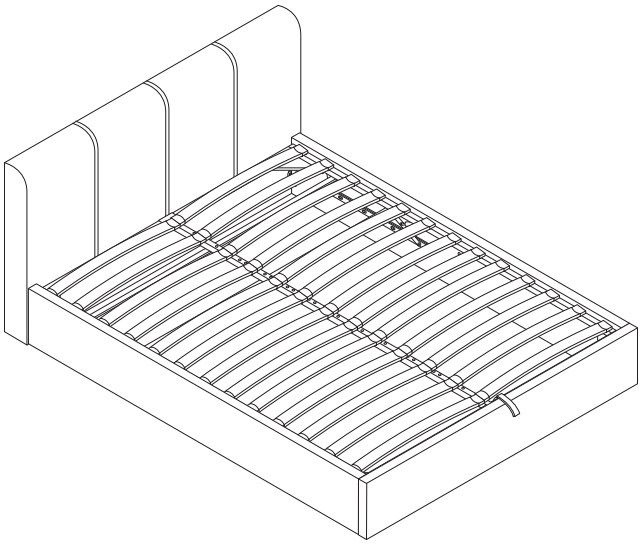

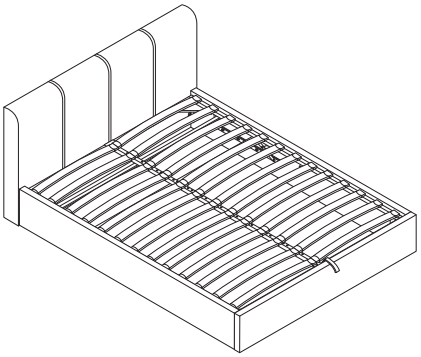

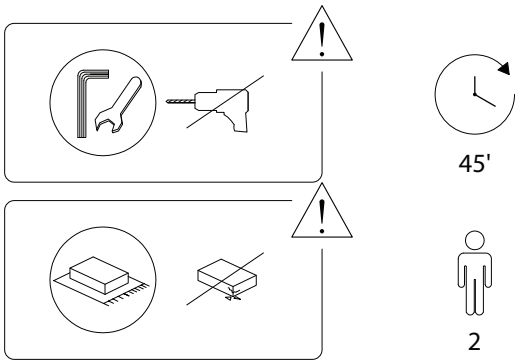
45'
2

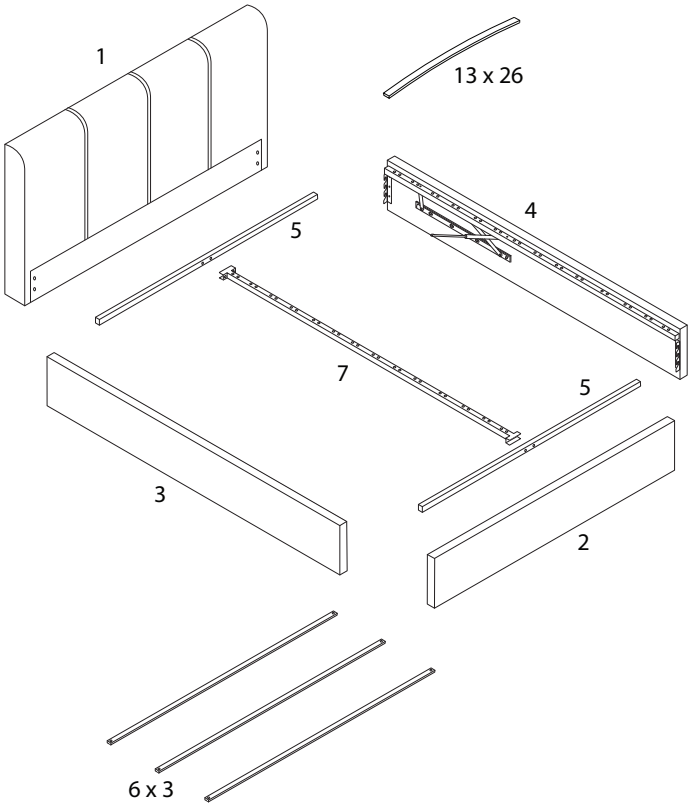
1
13 x 26
4
5
7
5
3
2
6 x 3

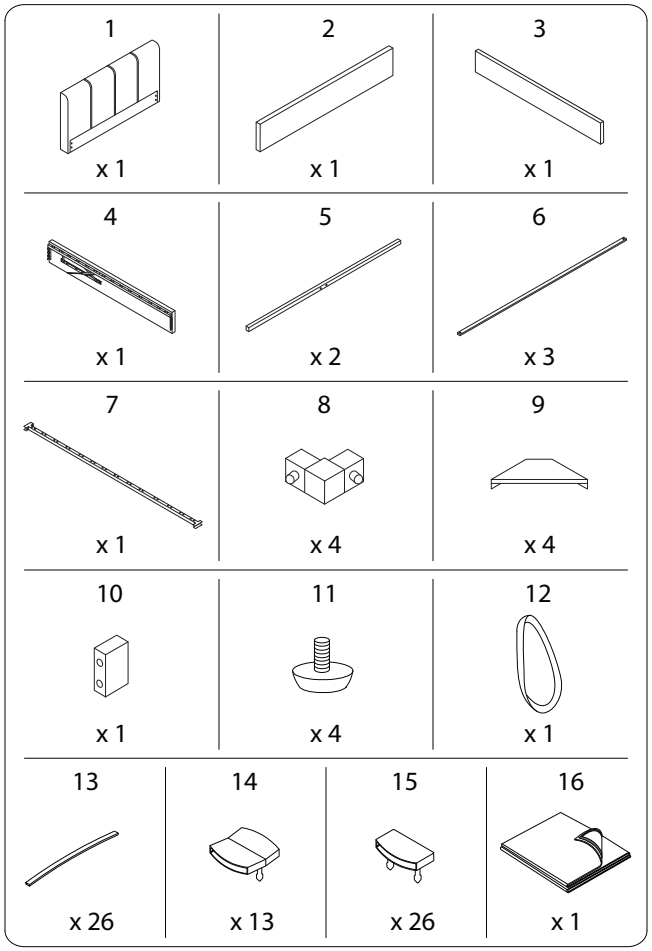
1
x 1
2
x 1
3
x 1
4
x 1
5
x 2
6
x 3
7
x 1
8
x 4
9
x 4
10
x 1
11
x 4
12
x 1
13
x 26
14
x 13
15
x 26
16
x 1

A	B	C
 x 12	 x 12	 x 2
D	E	F
 x 6	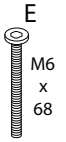 x 2	 x 12
G	H	I
 x 12	 x 1	 x 2
J		
 x 1		

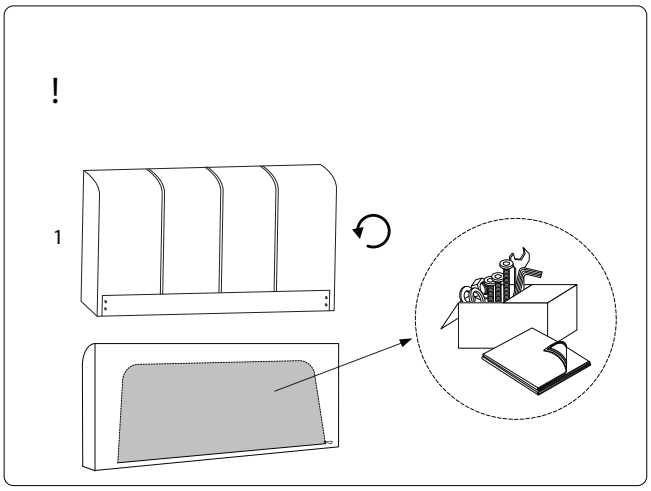

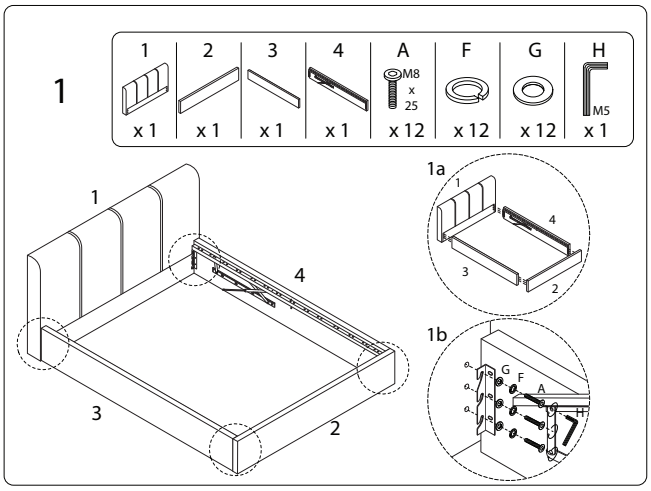

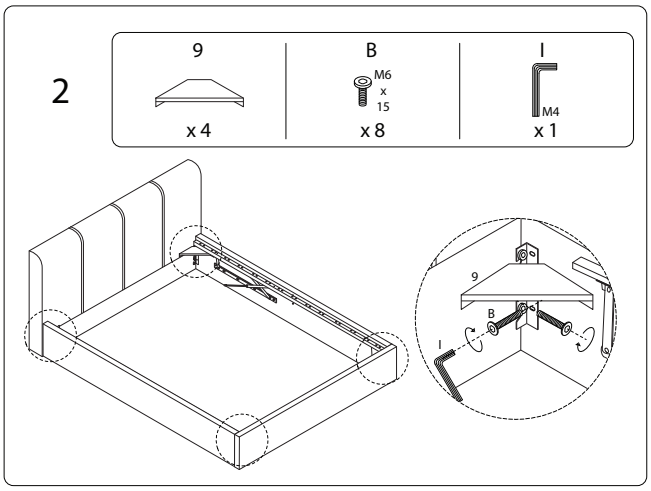

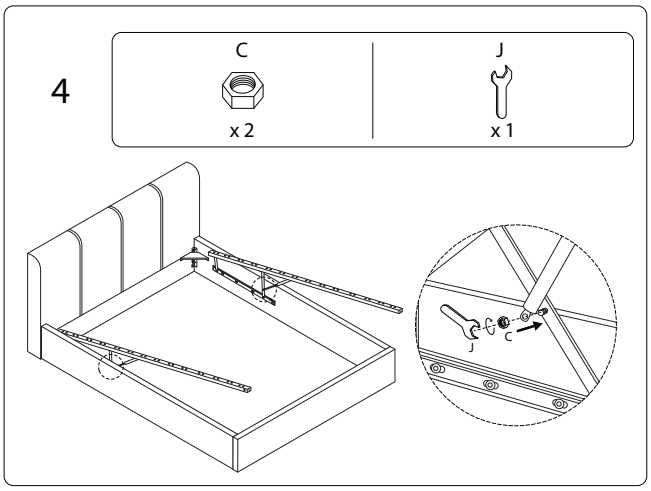

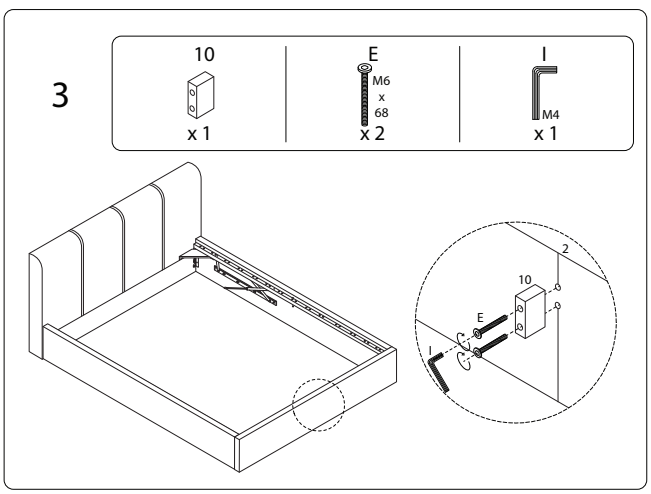

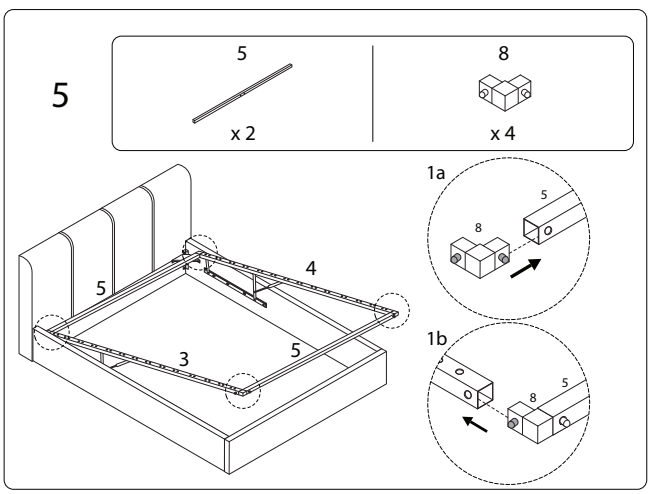

6

7	B	I
x 1	M6 x 15 x 4	M4 x 1

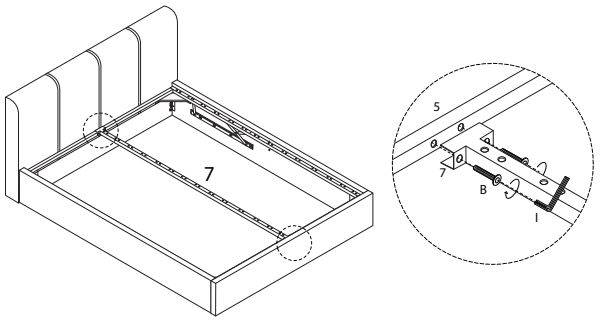

7

6	D	I
x 3	M6 x 30 x 6	M4 x 1

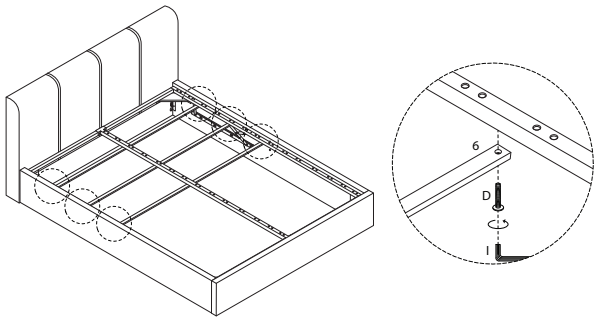

8

16
x 1

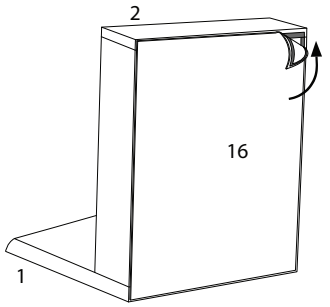

9

11
x 4

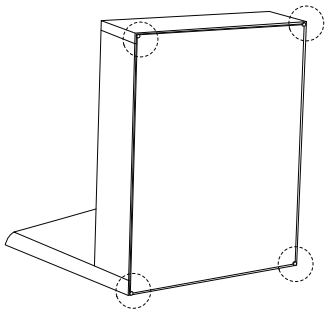

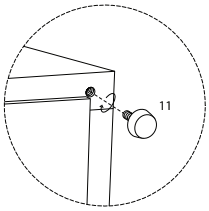

10 x 13

13	15	14
x 2	x 1	x 2

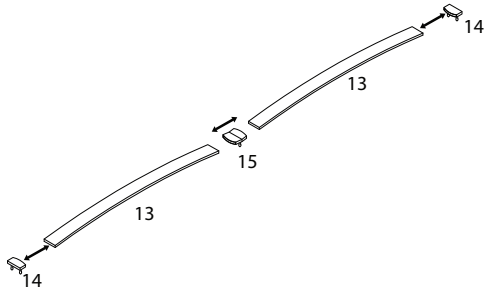

12

12
x 1

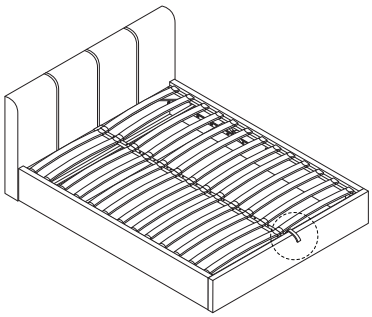

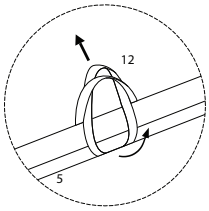

11

