BERGEN

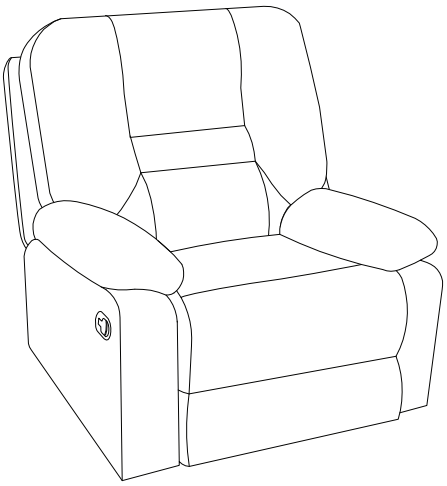

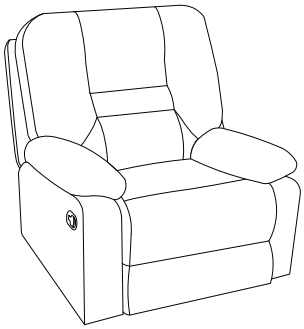

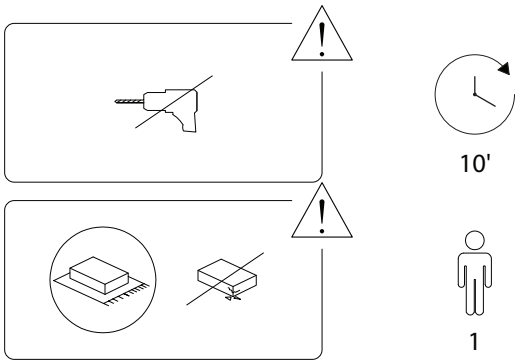

1/5

2/5

230/BERGEN/300426/

A

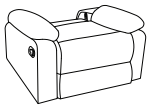

x 1

B

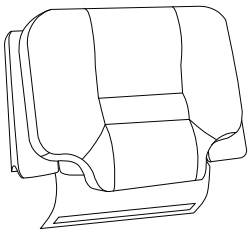

A

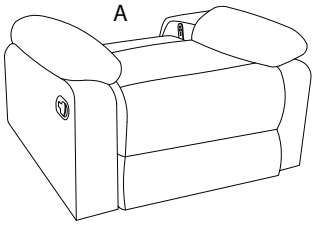

B

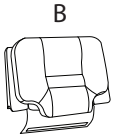

x 1

1

A



x 1

B



x 1

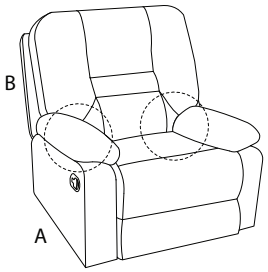

1a

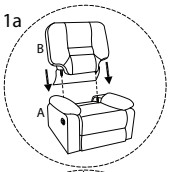

1b

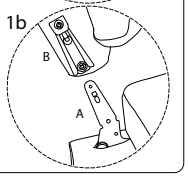

2

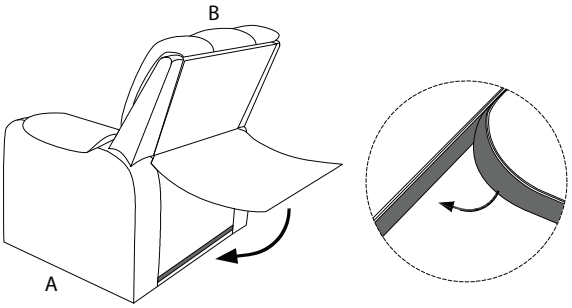

3/5

4/5

230/BERGEN/300426/

230/BERGEN/300426/

!

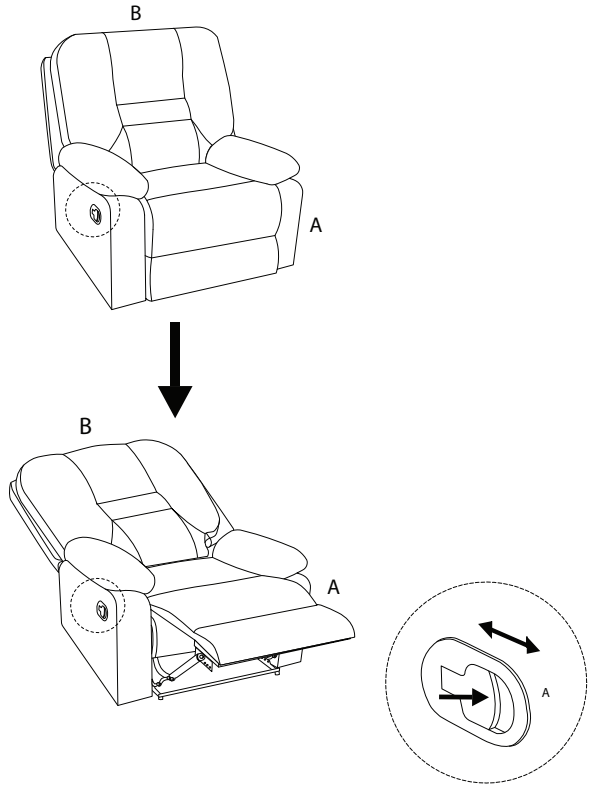

230/BERGEN/300426/