LEIRA

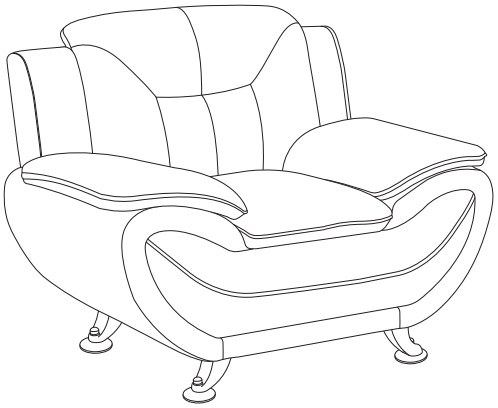

1/5

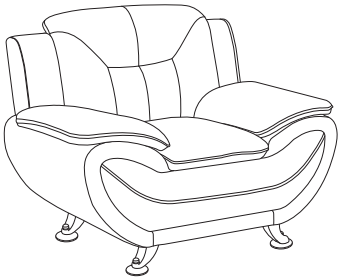

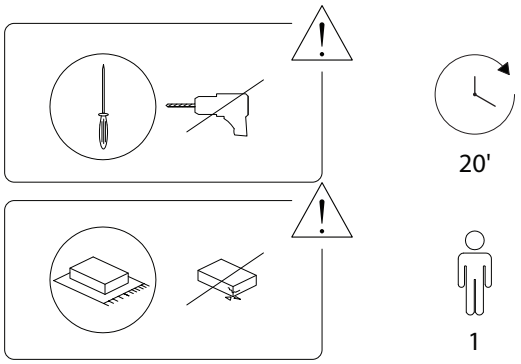

2/5

A	B	C
	 M4 x 25	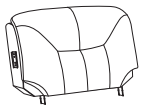
x 4	x 20	x 1

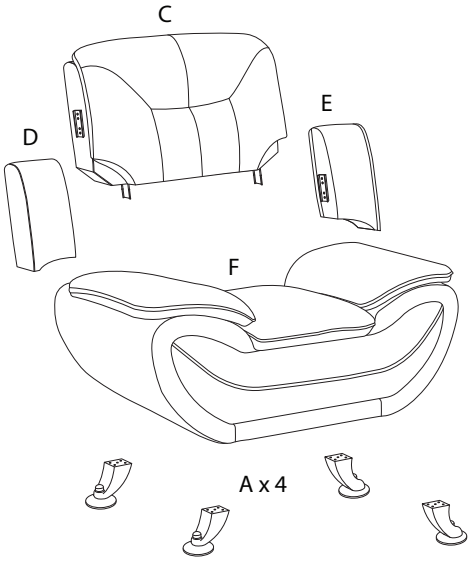

D	E	F
		
x 1	x 1	x 1

3/5

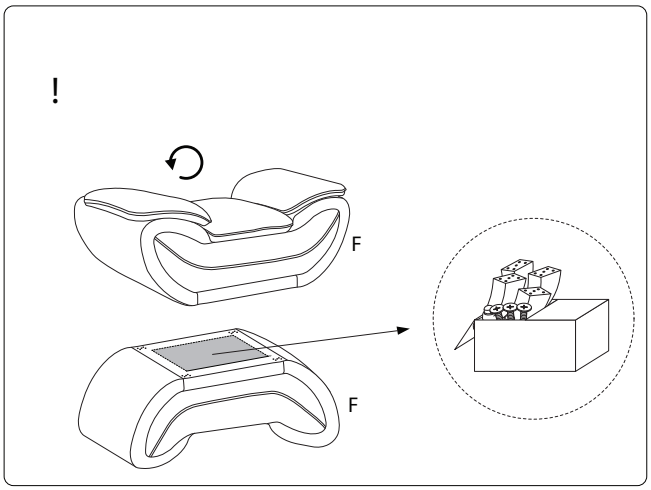

1

A	B	F
	 M4 x 25	
x 4	x 20	x 1

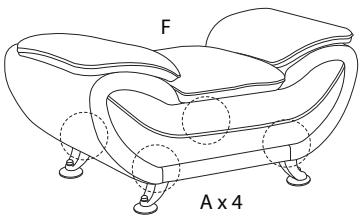

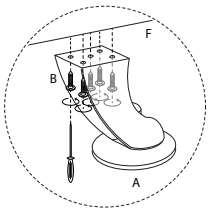

4/5

2

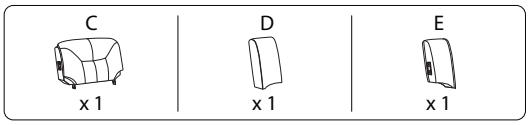

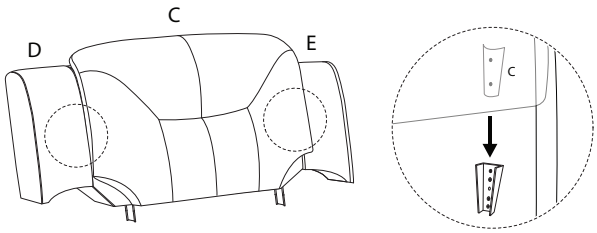

3

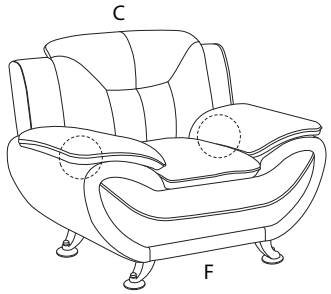

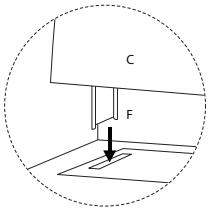

1129/LEIRA/160426/