ASSISI

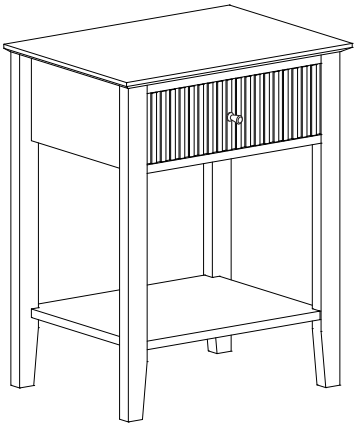

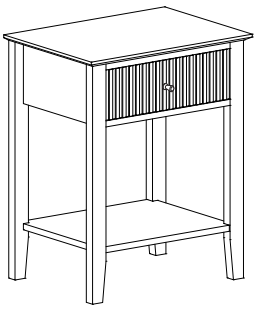

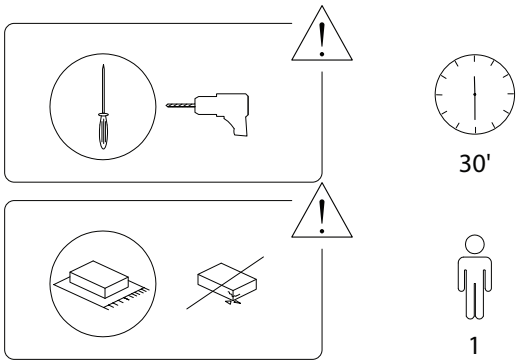

1/16

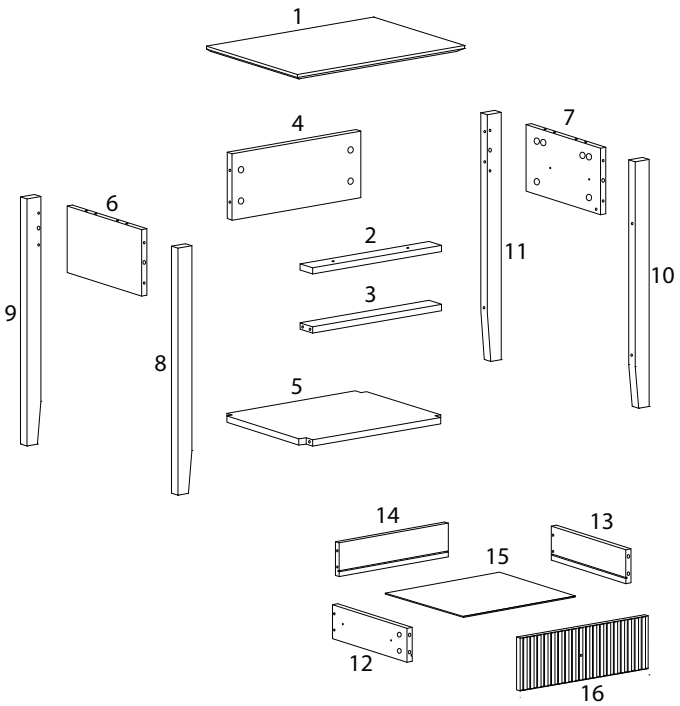

1
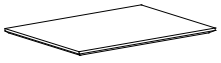
x 1

2/16

2	3	4
		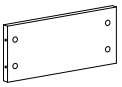
x 1	x 1	x 1
5	**6**	**7**
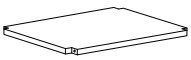		
x 1	x 1	x 1
8	**9**	**10**
		
x 1	x 1	x 1
11	**12**	**13**
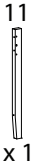		
x 1	x 1	x 1
14	**15**	**16**
	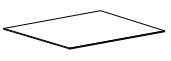	
x 1	x 1	x 1

3/16

A	B	C
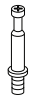		
x 26	x 26	x 10
D	**E**	**F**
 M3 x 12		 M4 x 25
x 8	x 4	x 2
G	**H**	**I**
 M4 x 35		 M4 x 16
x 5	x 1	x 1
J	**K**	**L**
	 M3 x 16	
x 1	x 1	x 1
M	**N**	**O**
	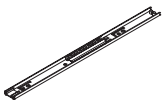	
x 2	x 2	x 2

4/16

!

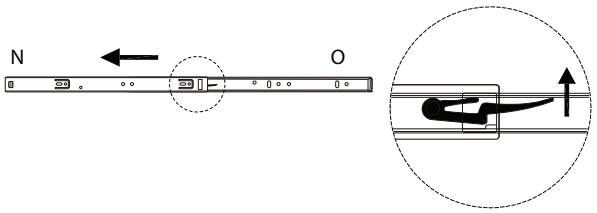

2

8	9	10	11	A
x 1	x 1	x 1	x 1	x 18

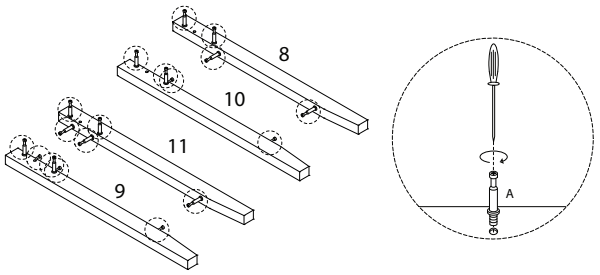

5/16

3

6	7	C
x 1	x 1	x 4

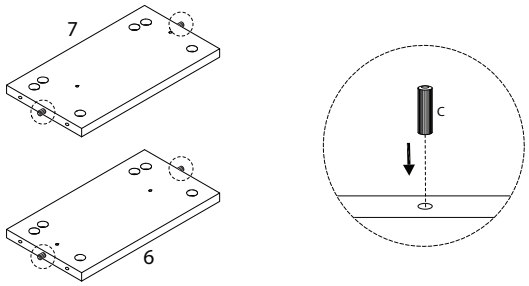

5

B
x 4

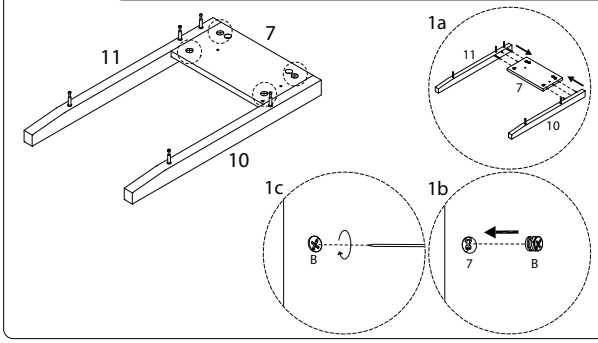

4

B
x 4

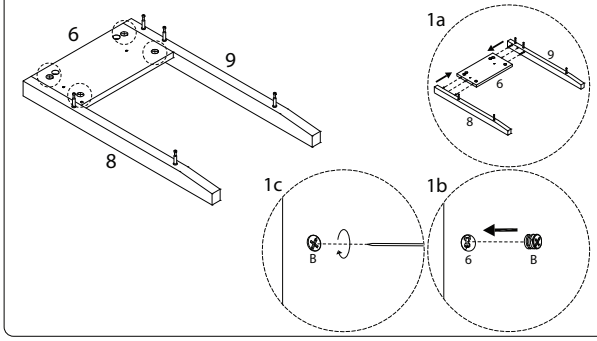

6/16

6

D	N
 M3 x 12	
x 2	x 1

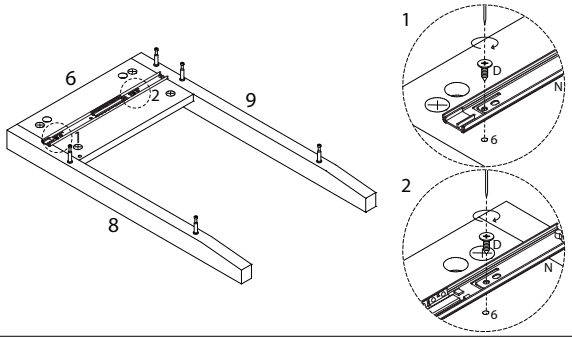

7/16

7

D
M3 x 12
x 2

N
x 1

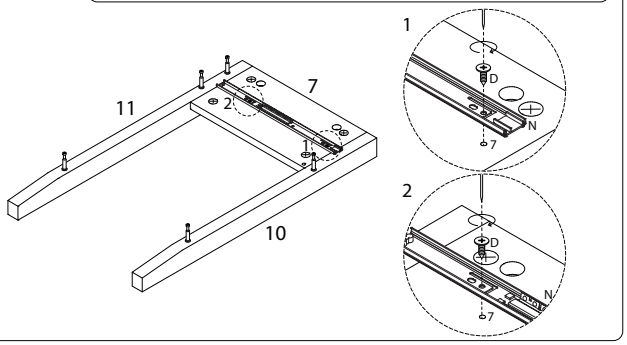

8

3
x 1

C
x 2

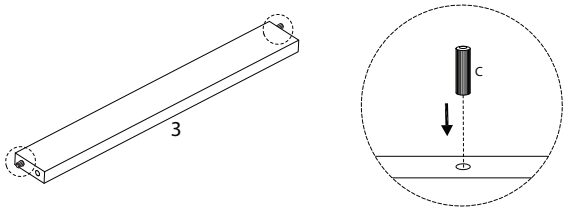

9

4
x 1

5
x 1

B
x 5

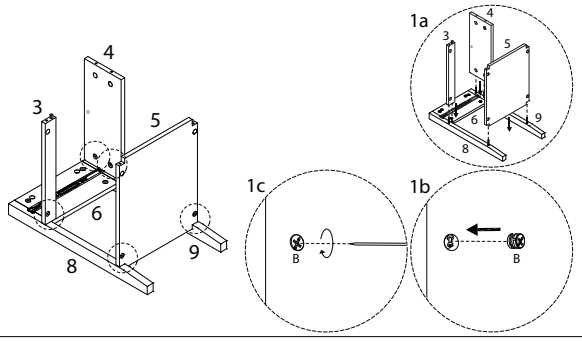

10

B
x 5

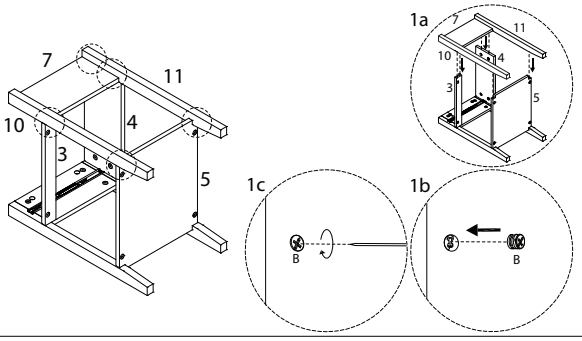

11

E
x 4

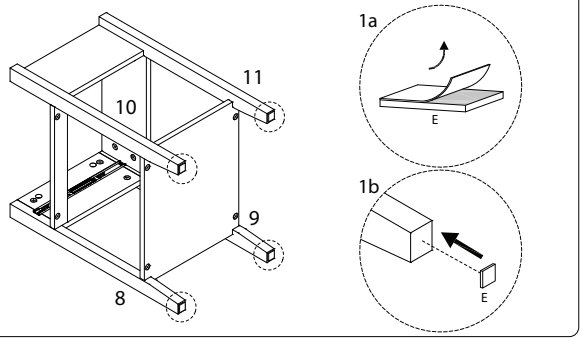

12

1
x 1

A
x 4

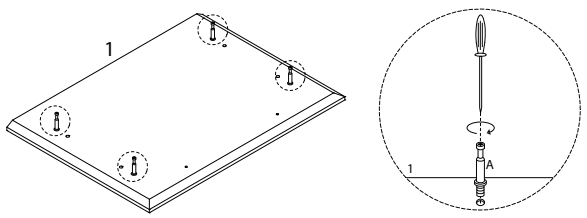

13

2
x 1

F
M4 x 25
x 2

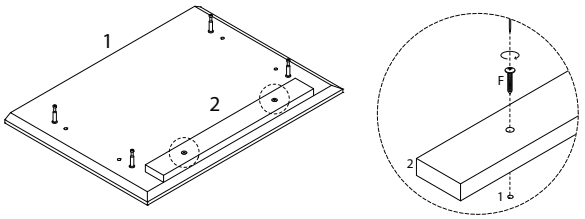

14

C
x 4

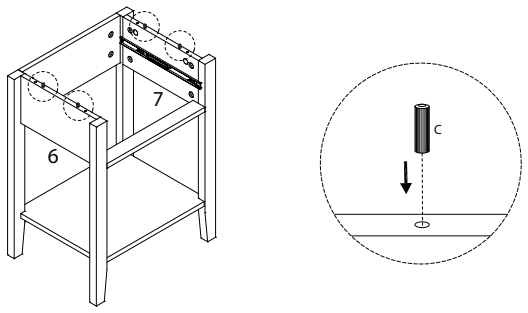

15

B

x 4

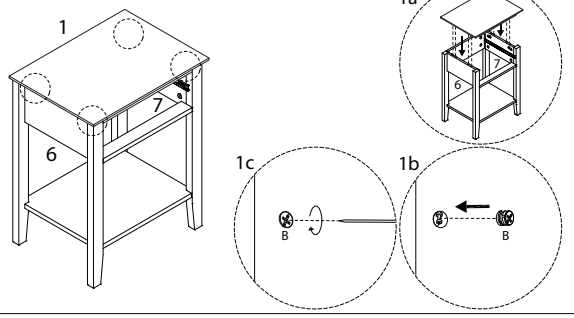

16

16

x 1

A

x 4

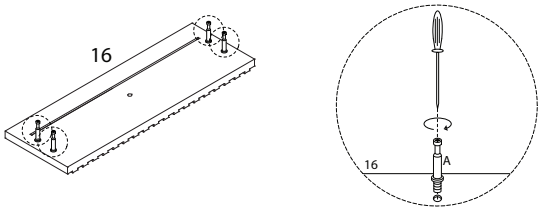

17

12

x 1

13

x 1

B

x 4

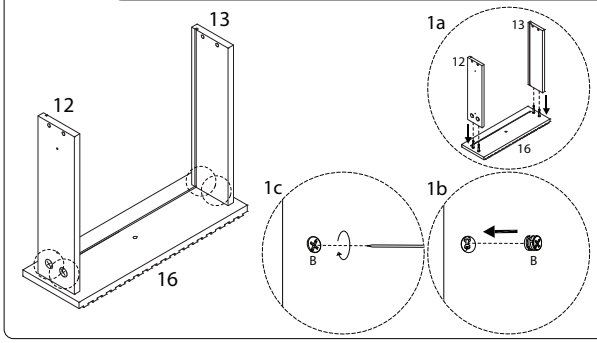

18

15

x 1

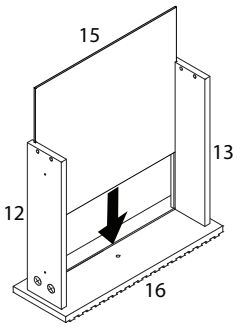

19

14

x 1

G

M4 x 35

x 4

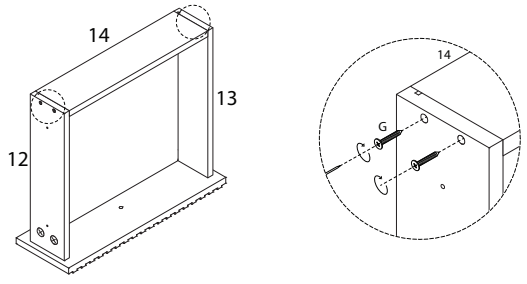

21

H

x 1

I

M4 x 16

x 1

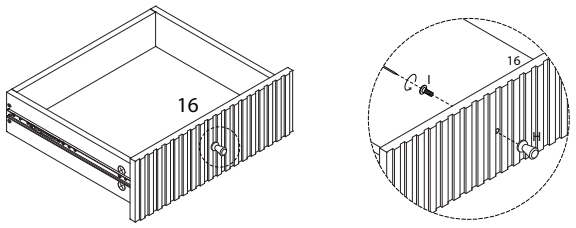

20

D

M3 x 12

x 4

O

x 2

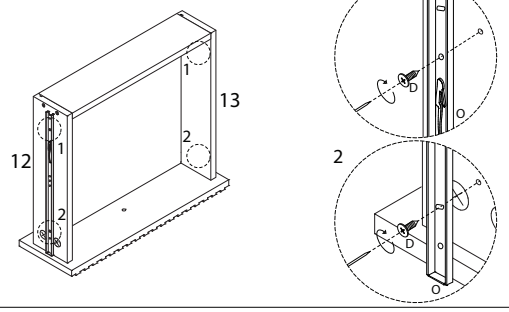

22

J

x 1

K

M3 x 16

x 1

M

x 1

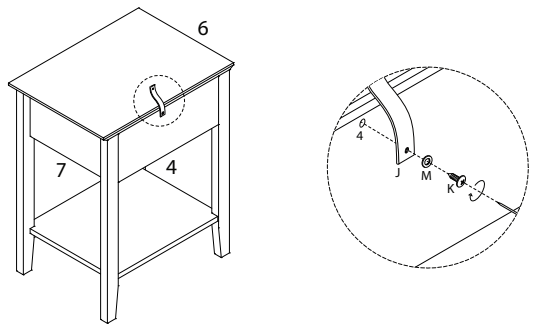

23

G	M	L
M4 x 35		
x 1	x 1	x 1

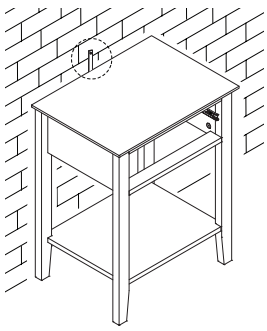

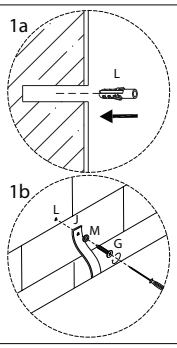

24

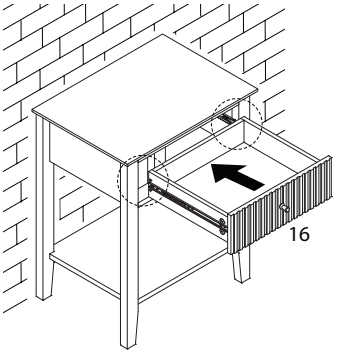

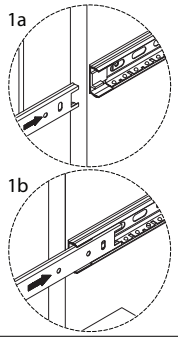

680/ASSISI/230126/