TOTORANI

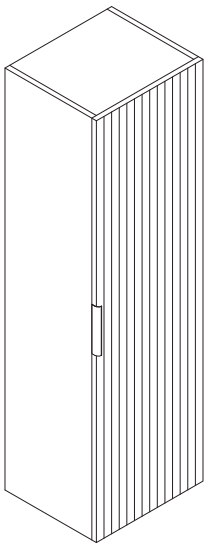

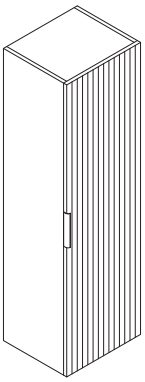

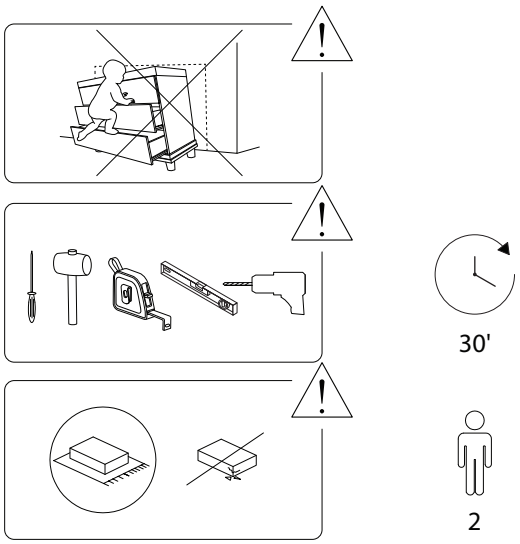

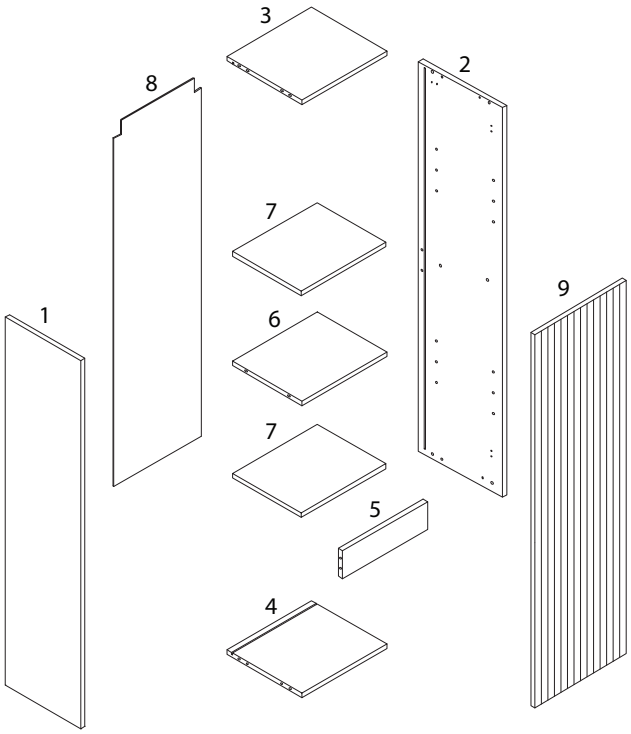

1	2
	
x 1	x 1

3	4	5	6
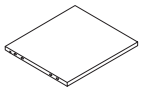	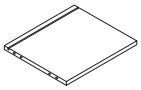		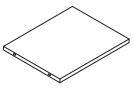
x 1	x 1	x 1	x 1
7	**8**	**9**	**A**
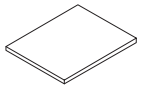			
x 2	x 1	x 1	x 16
B	**C**	**D**	**E**
			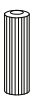
x 16	x 16	x 14	x 8
F	**G1**	**G2**	**G3**
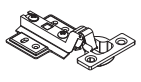	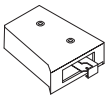	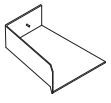	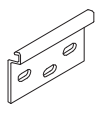
x 2	x 2	x 2	x 2

H	J	K	L	M
			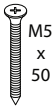	
x 4	x 8	x 6	x 6	x 1

1

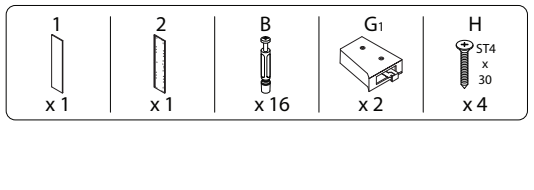
1
x 1
2
x 1
B
x 16
G1
x 2
H
ST4
x
30
x 4

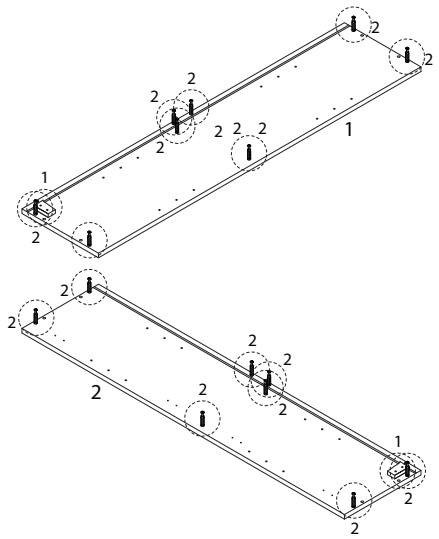
2
1

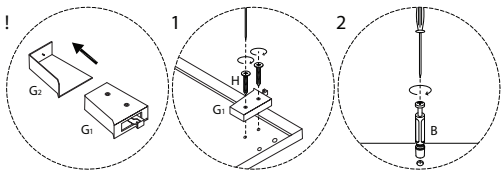
!
G2
G1
1
H
G1
2
B

2

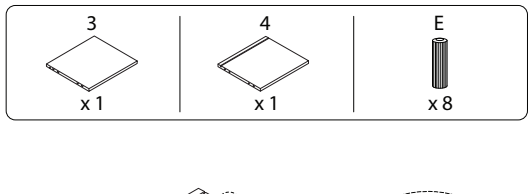
3
x 1
4
x 1
E
x 8

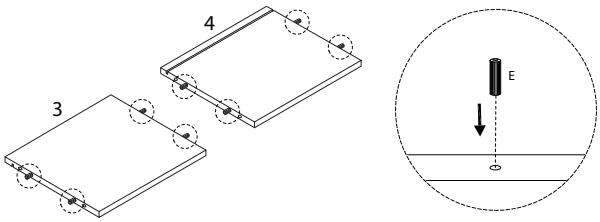
4
3
E

3

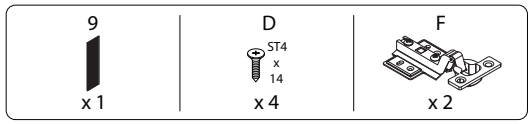
9
x 1
D
ST4
x
14
x 4
F
x 2

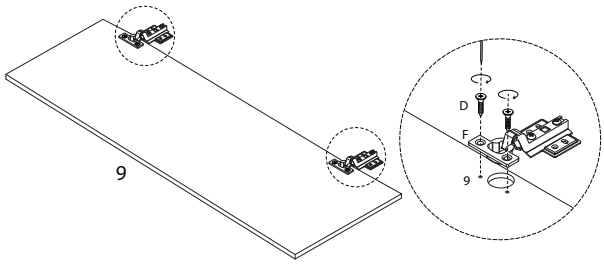
9
D
F
9

4

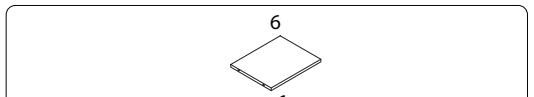
6
x 1

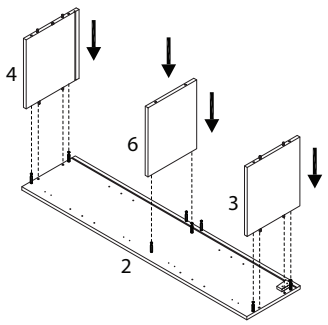
4
6
3
2

6

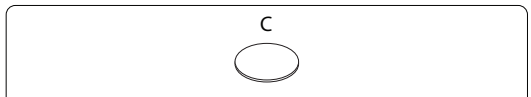
C
x 6

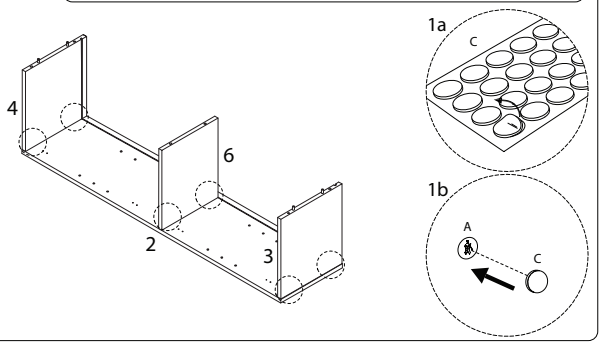
4
6
2
3
1a
C
1b
A
C

5

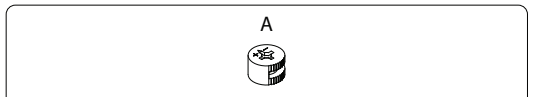
A
x 6

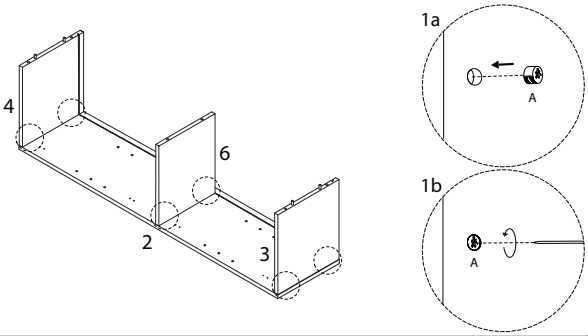
4
6
2
3
1a
A
1b
A

7

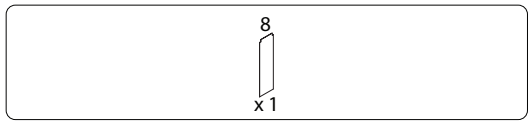
8
x 1

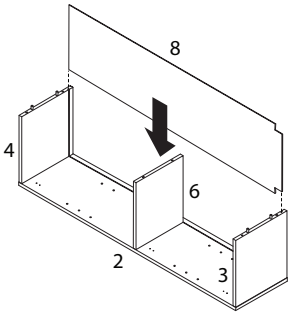
8
4
6
2
3

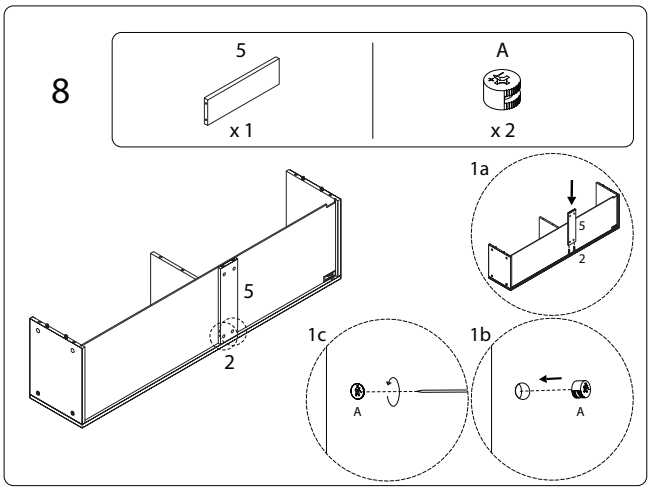
8
5
x 1
A
x 2
1a
5
2
5
2
1c
A
1b
A

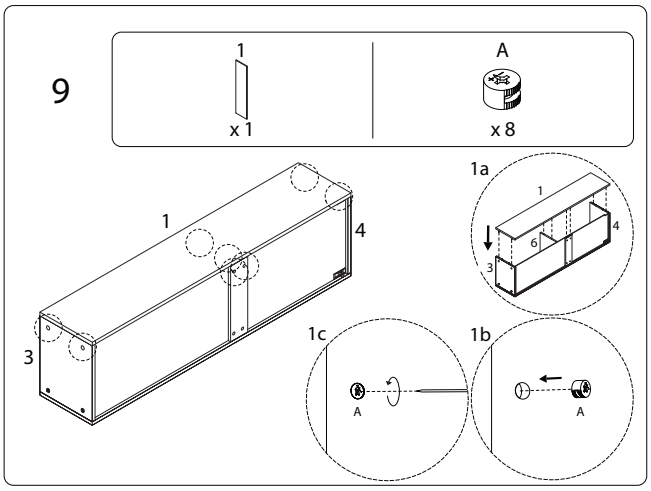
9
1
x 1
A
x 8
1a
1
6
4
3
1
4
3
1c
A
1b
A

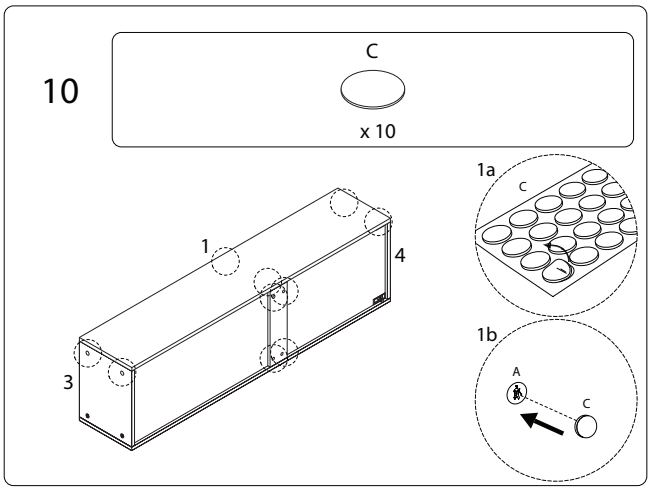
10
C
x 10
1a
C
1
4
3
1b
A
C

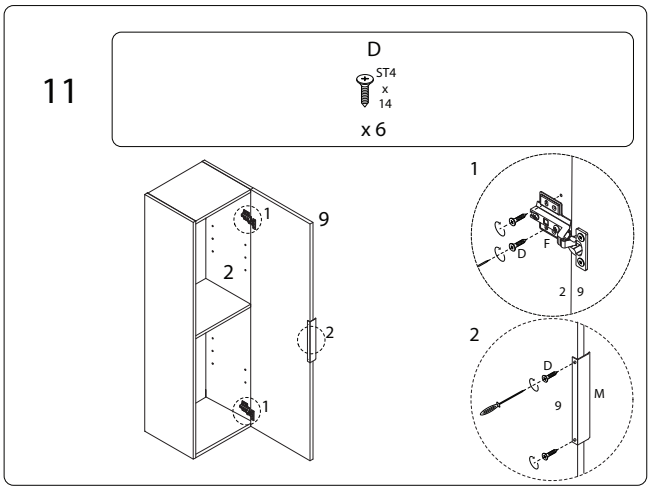
11
D
ST4
x
14
x 6
1
9
2
2
1
1
D
F
2
9
2
D
M
9

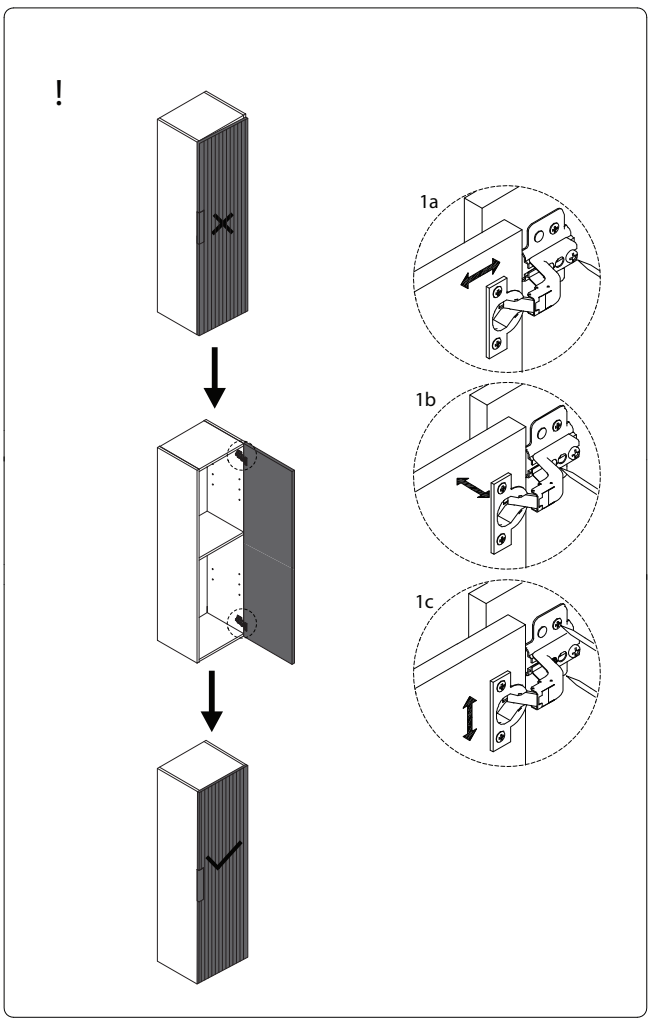
!
1a
1b
1c

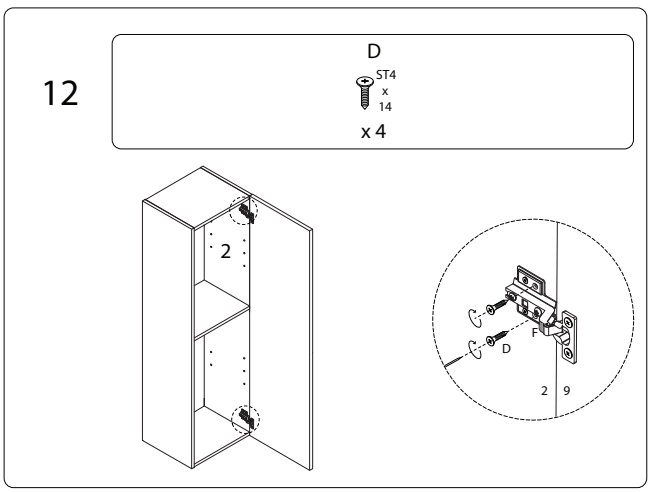
12
D
ST4
x
14
x 4
2
D
F
2
9

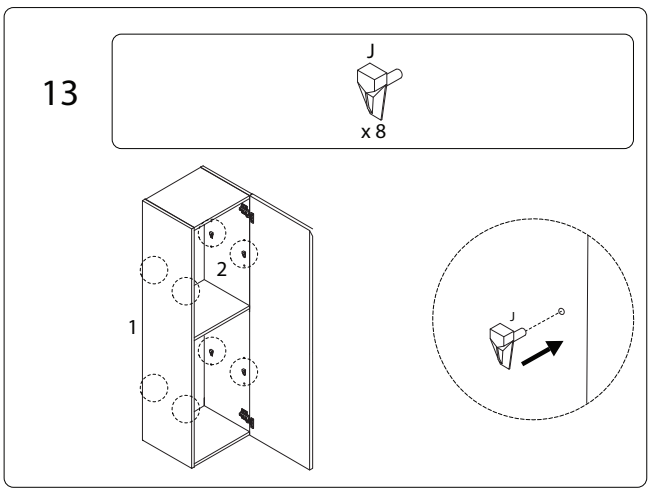
13
J
x 8
2
1
J

14

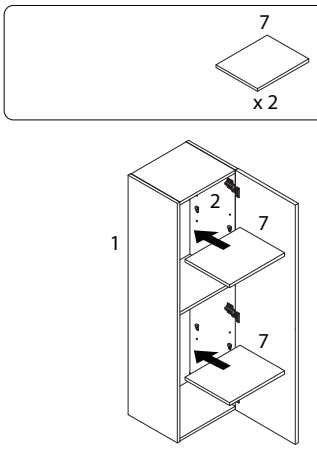

15

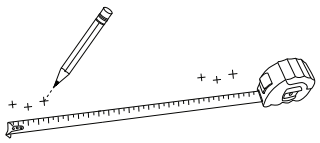

2354/TOTORANI/140926

16

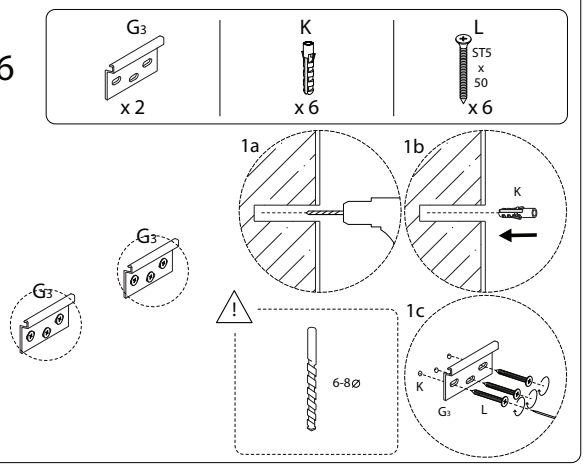

17

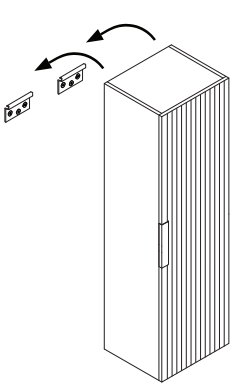

2354/TOTORANI/140926

18

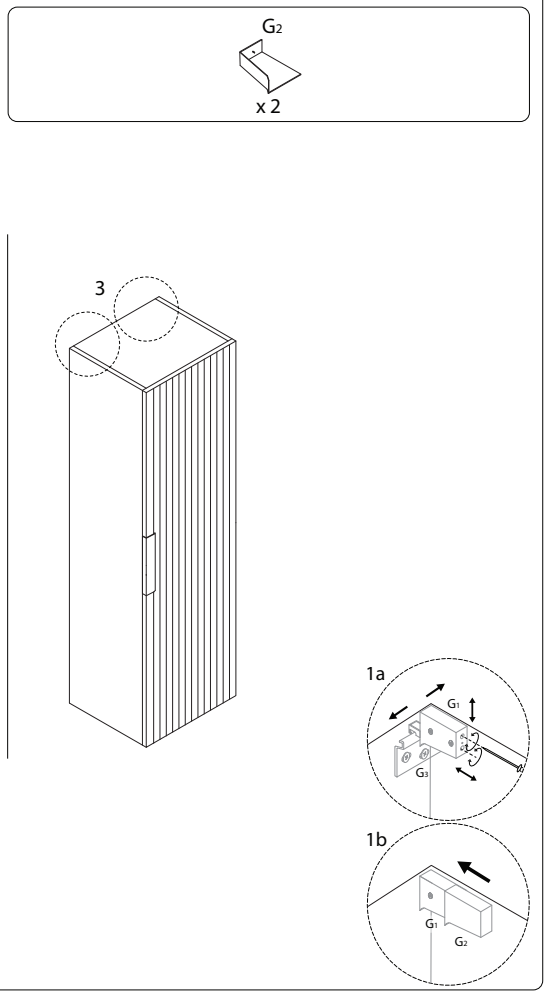

2354/TOTORANI/140926