NEWARK III

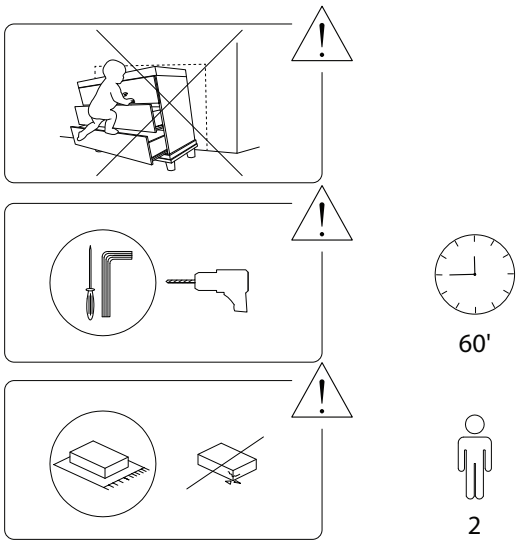
60'
2

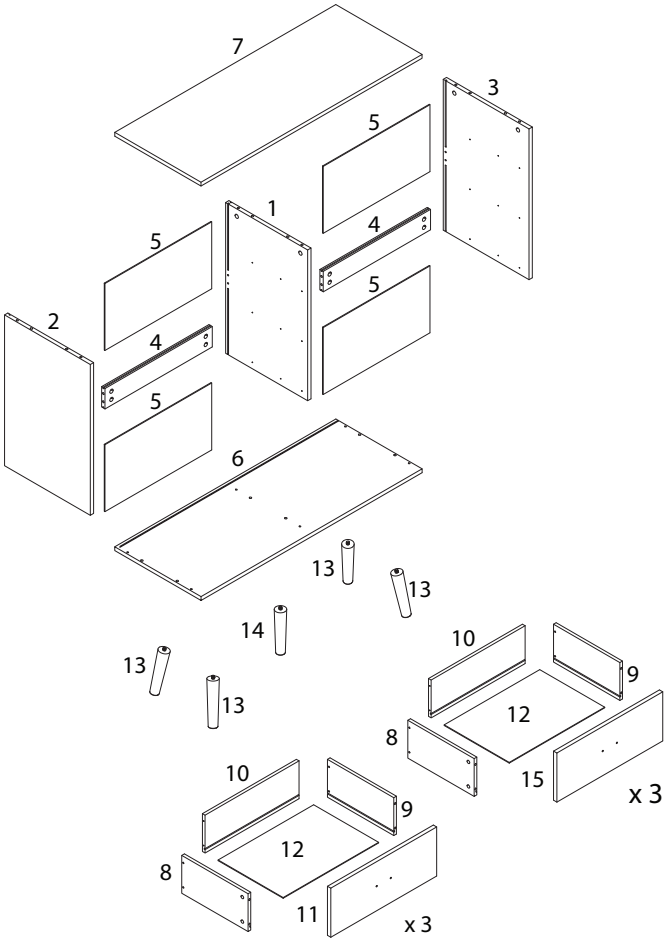
7
3
5
1
4
5
5
2
4
5
6
13
13
14
13
13
10
9
12
8
15
x 3
10
9
12
8
11
x 3

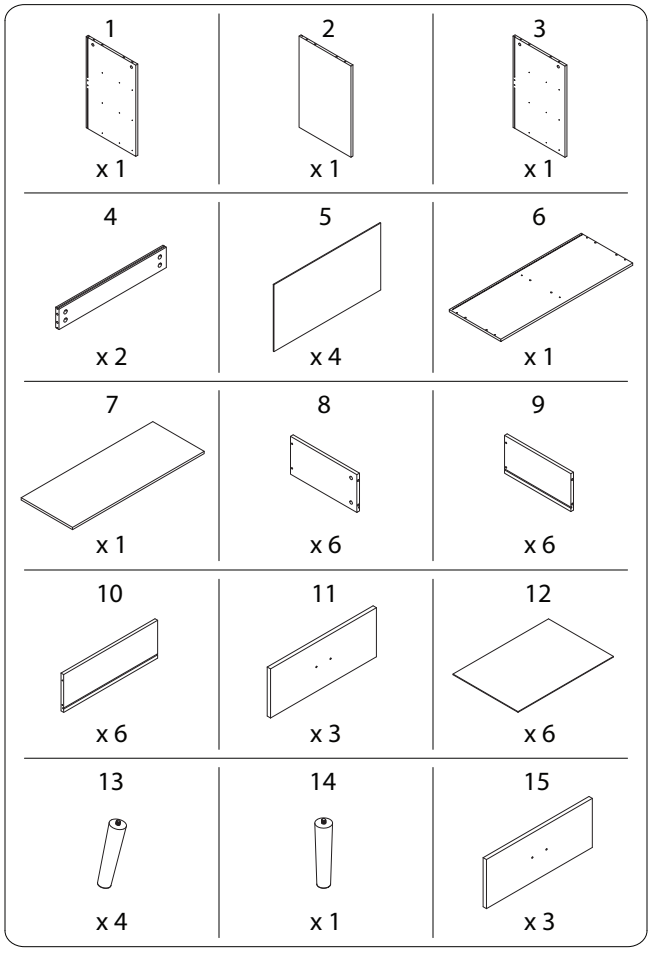
1
x 1
2
x 1
3
x 1
4
x 2
5
x 4
6
x 1
7
x 1
8
x 6
9
x 6
10
x 6
11
x 3
12
x 6
13
x 4
14
x 1
15
x 3

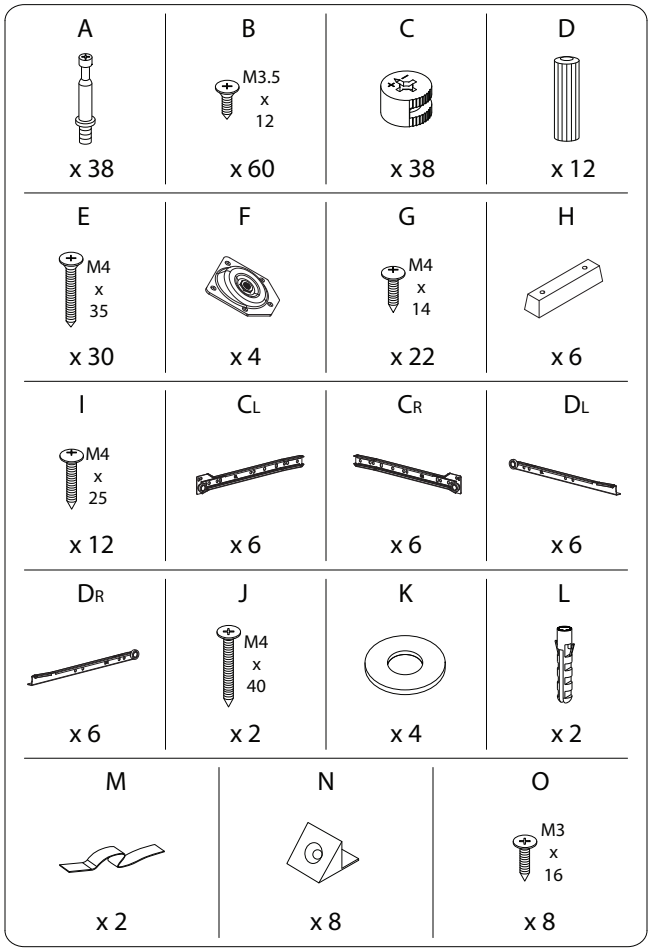
A
x 38
B
M3.5 x 12
x 60
C
x 38
D
x 12
E
M4 x 35
x 30
F
x 4
G
M4 x 14
x 22
H
x 6
I
M4 x 25
x 12
CL
x 6
CR
x 6
DL
x 6
DR
x 6
J
M4 x 40
x 2
K
x 4
L
x 2
M
x 2
N
x 8
O
M3 x 16
x 8

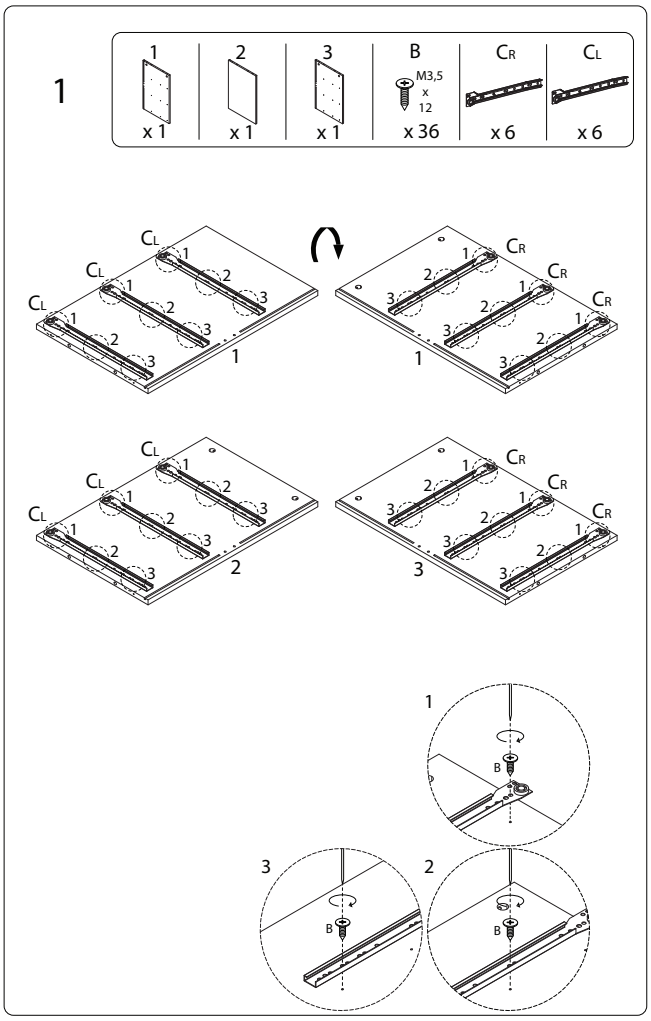
1
1
x 1
2
x 1
3
x 1
B
M3,5 x 12
x 36
CR
x 6
CL
x 6
CL
CR
1
2
3
B

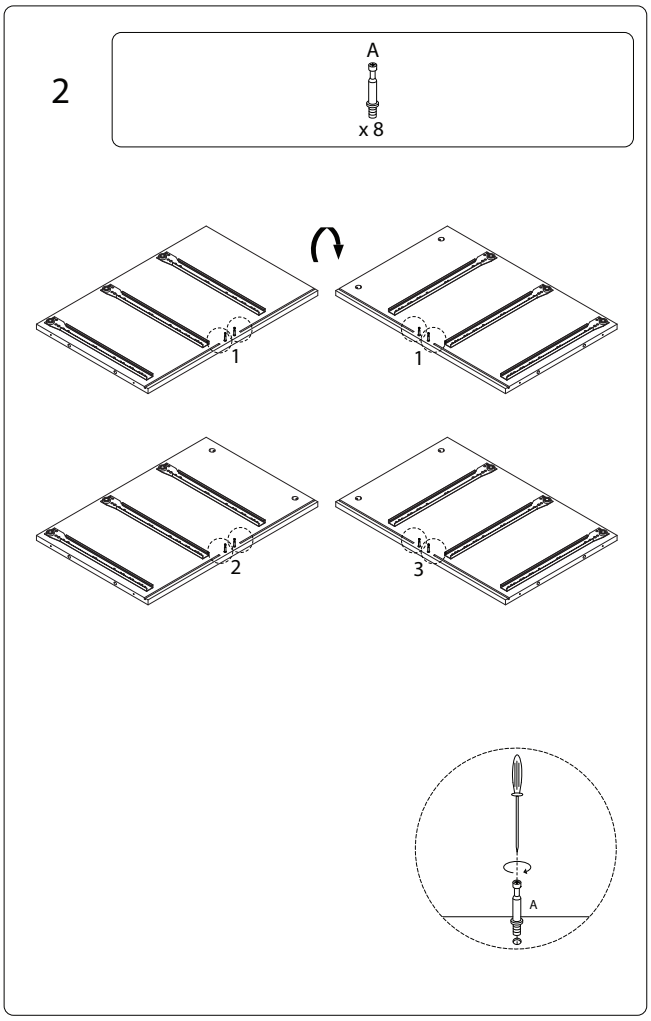
2
A
x 8
1
1
2
3
A

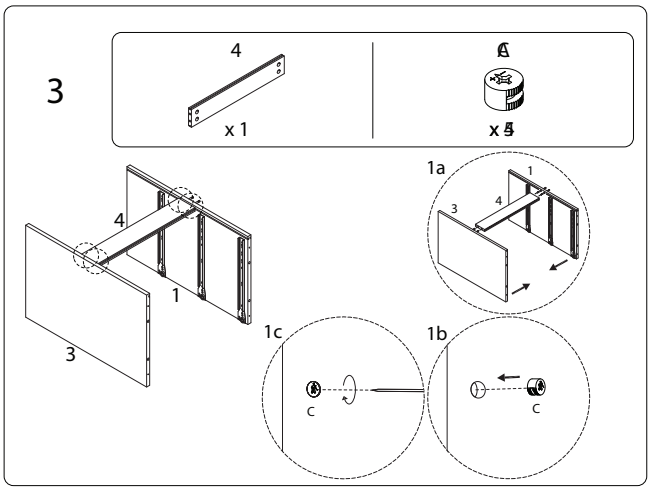
3
4
x 1
A
x 5
1a
1b
1c
C

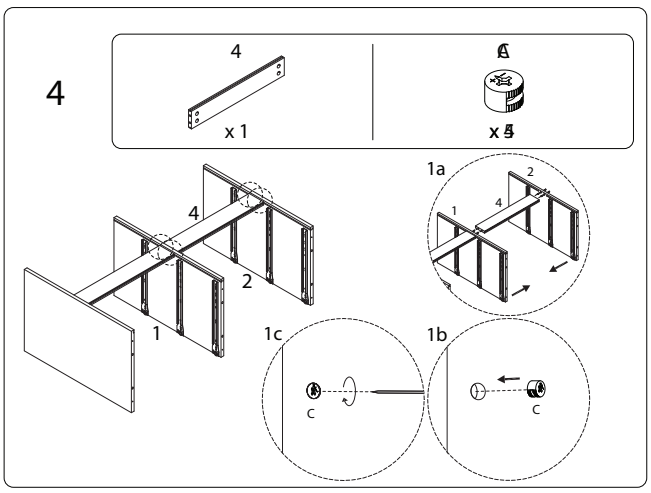
4
4
x 1
A
x 5
1a
1b
1c
C

5

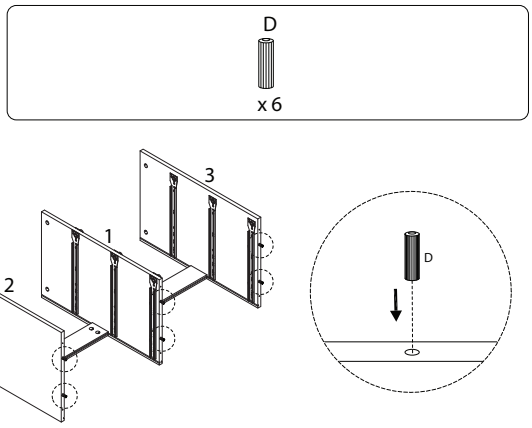

6

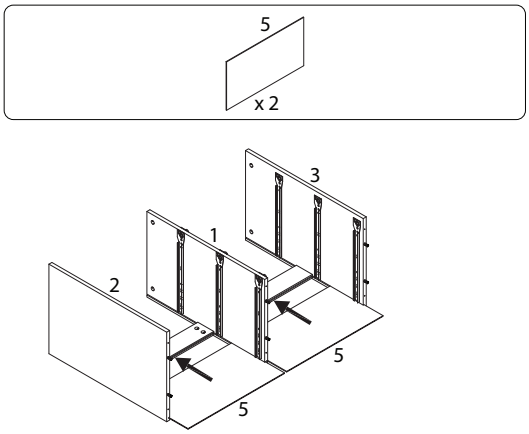

7

8

9

10

11

12

13

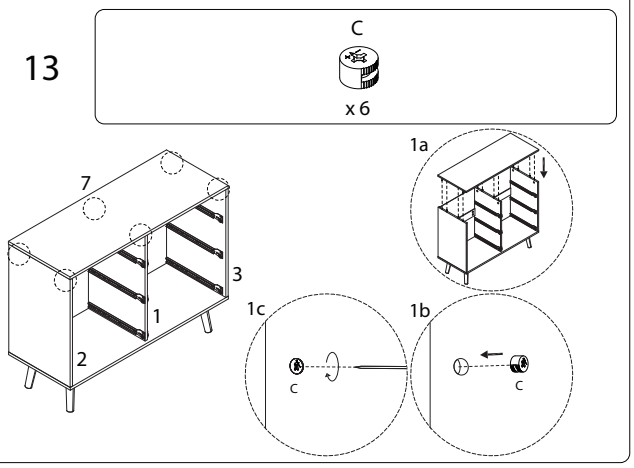

15 x 6

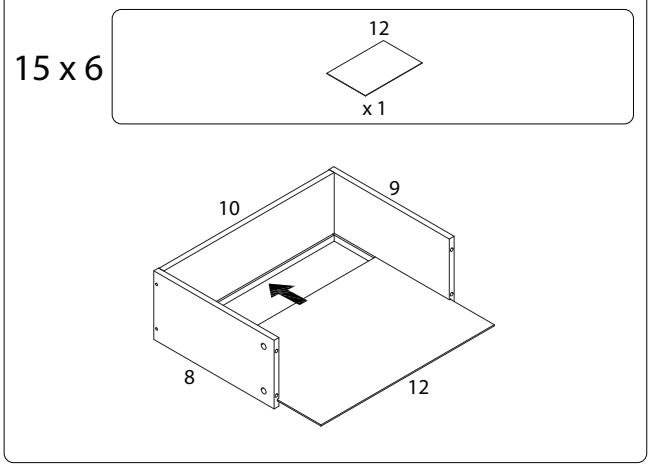

14 x 6

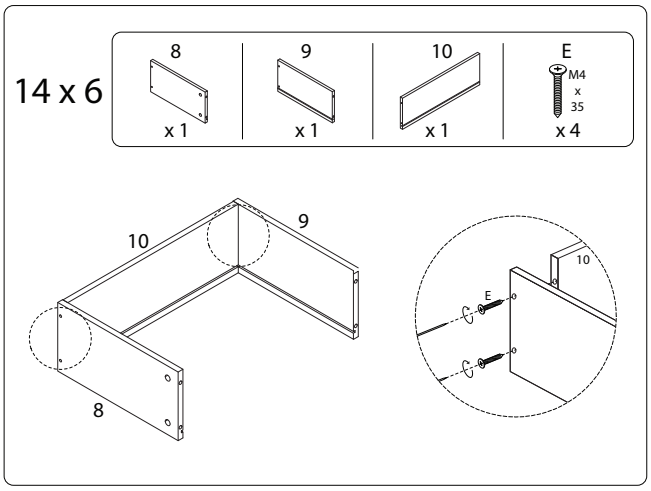

16 x 3

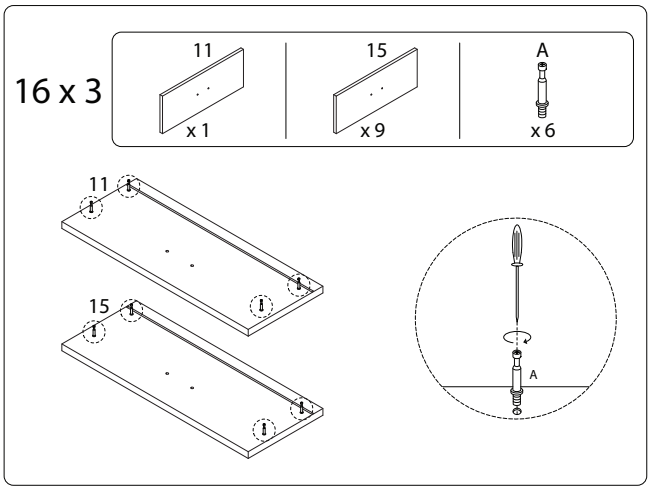

17 x 3

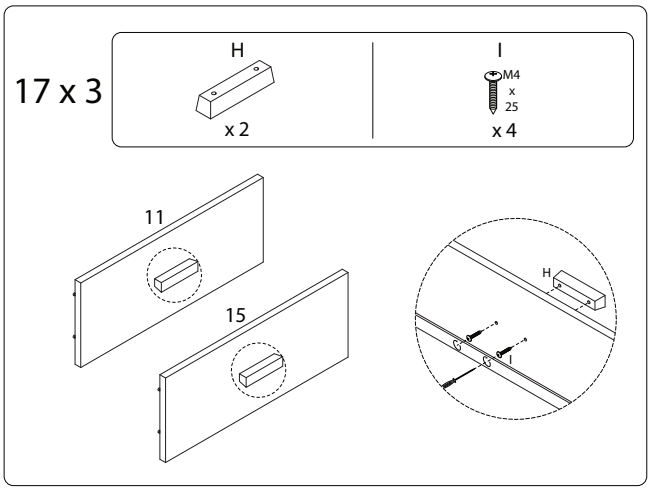

19 x 3

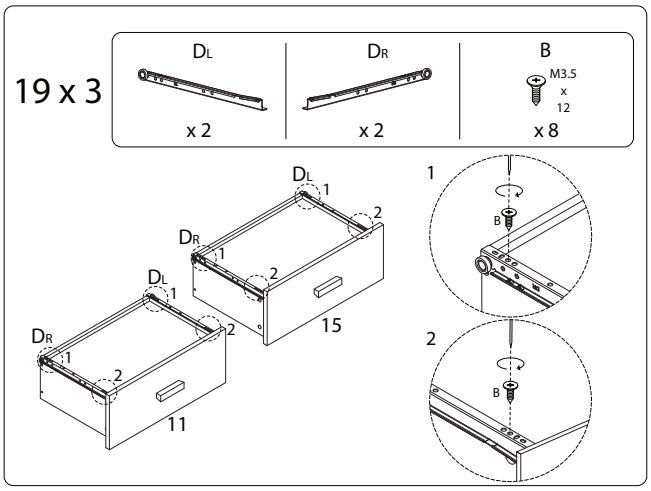

18 x 3

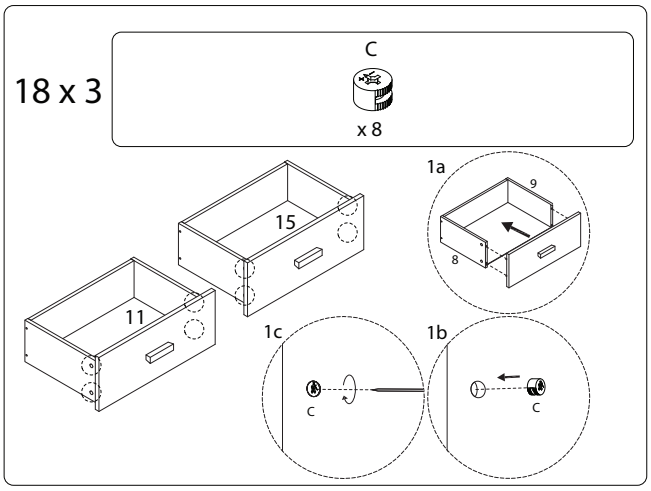

20

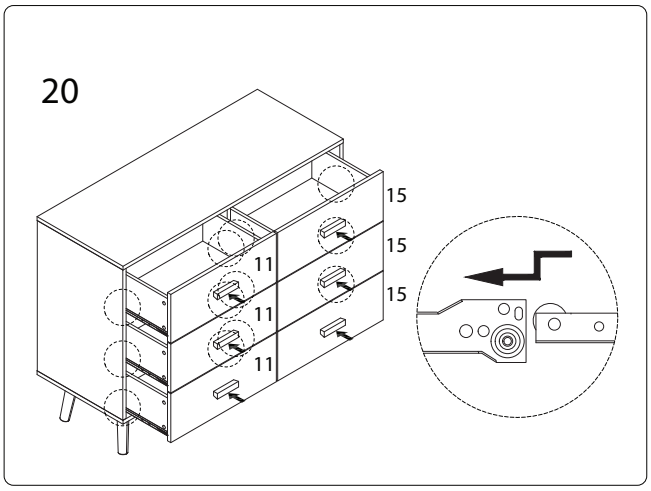

21

N	O
x 8	M3 x 16 x 8

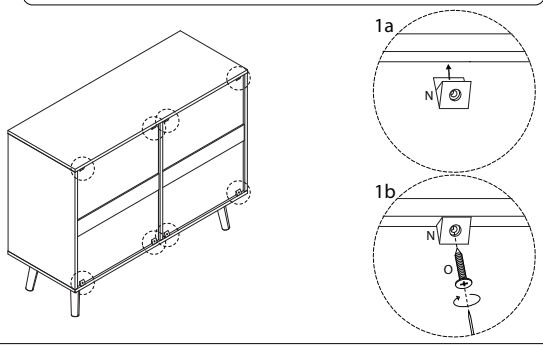

22

G	K	M
M4 x 14 x 2	x 2	x 2

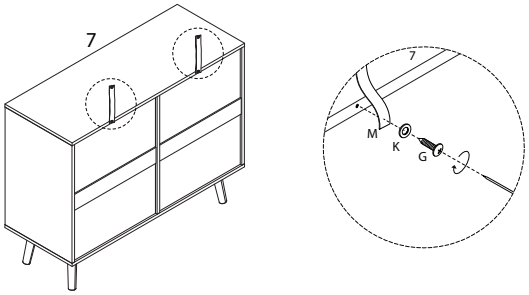

23
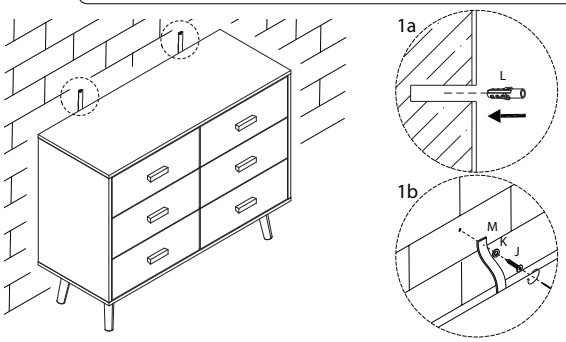
J	K	L
M4 x 40 x 2	x 2	x 2